3 616 C07 A71

Stand / Issue 07-02-14 **Fig./Abb. 1**

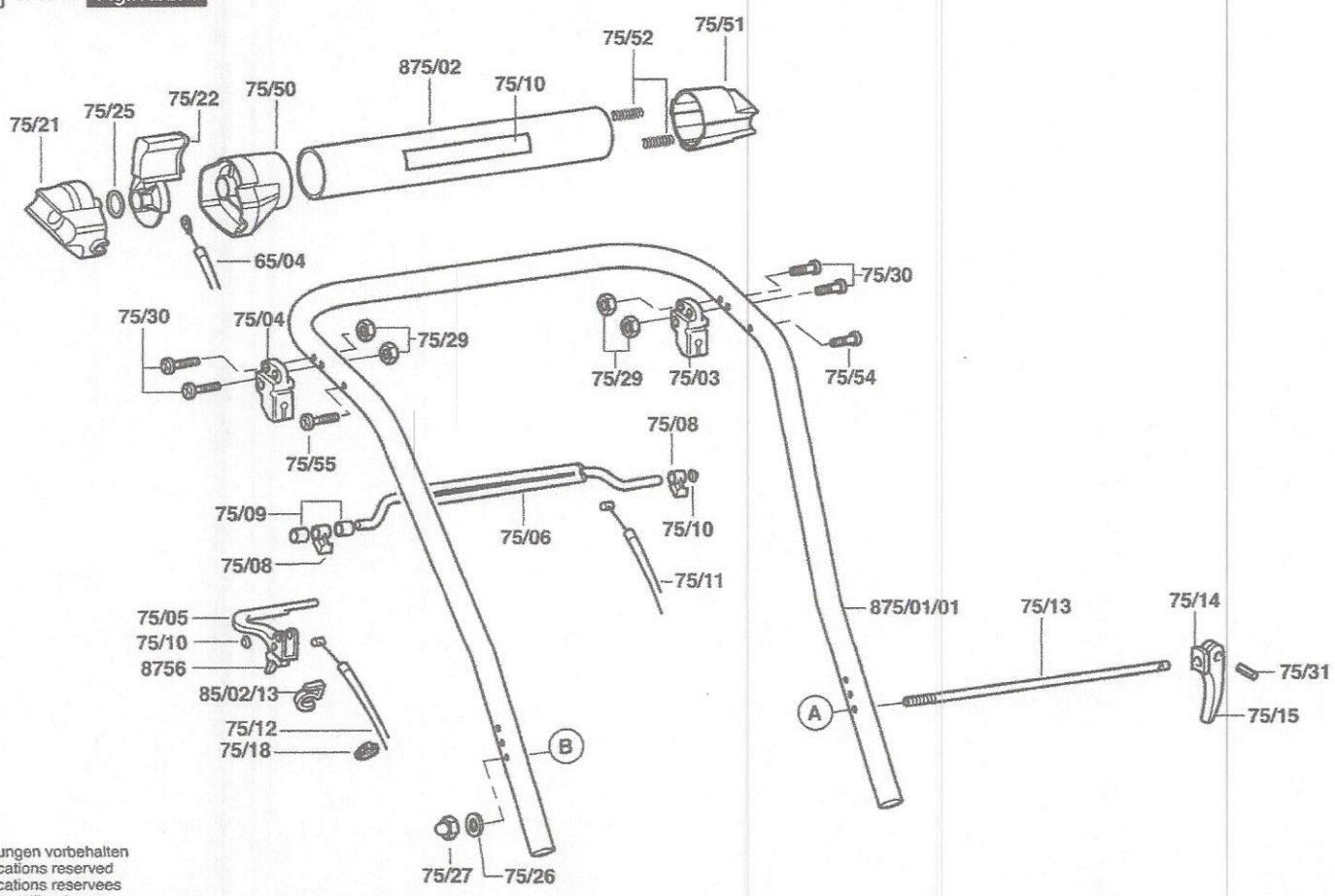

Änderungen vorbehalten
Modifications reserved
Modifications reservees
Salvo modificaciones

Steve Hancke
Allett
Allett Mowers
Turfmech Machinery Ltd
Stafford
ST18 0PJ
United Kingdom

Date: 24/07/2013
Tel: 01889 272093
Fax:
Email: steve.hancke@allett.co.uk

Service Bill of Materials: 3616C07A711

Ref	Part #	Qty	Description
65/04	F016A75856	1	Control Cable
75/03	F016L36720	1	Spare Part L/H L/H
75/04	F016L36721	1	Spare Part R/H R/H
75/05	F016103833	1	Lever
75/06	F016L36714	1	Control Lever
75/08	F016L36717	2	Support
75/09	F016L36719	3	Bushing
75/10	F016T48990	2	Cover BLACK Ø 8 MM
75/11	F016A58035	1	Cable Rear Roller
75/12	F016A58040	1	Adjusting Part
75/12	F016A58036	1	Clutch Cable
75/13	F016A58203	1	Locking Pin
75/14	F016T48856	1	Lever
75/15	F016T48384	1	Lever
75/16	F016103834	1	Support
75/18	F016W26070	3	Cable Strap
75/20	F016A75828	1	Sticker
75/21	F016A75800	1	Bracket
75/22	F016L66176	1	Control Lever
75/25	F016L59927	1	Nut M 4 M 4
75/26	F016L22700	1	Spring Washer M6 M6
75/27	F016L22701	1	Special Nut
75/29	F016L36836	4	Nut M5 M5
75/30	F016A75751	4	Screw M 5x32 M 5x32
75/31	F016T56145	1	Straight Pin
75/50	F016A75816	1	Adapter
75/51	F016A75817	1	Adapter
75/52	F016T49226	2	Compression Spring
75/54	F016A75820	1	Screw
75/55	F016A75798	1	Screw

Stand / Issue 07-02-12 **Fig./Abb. 2**

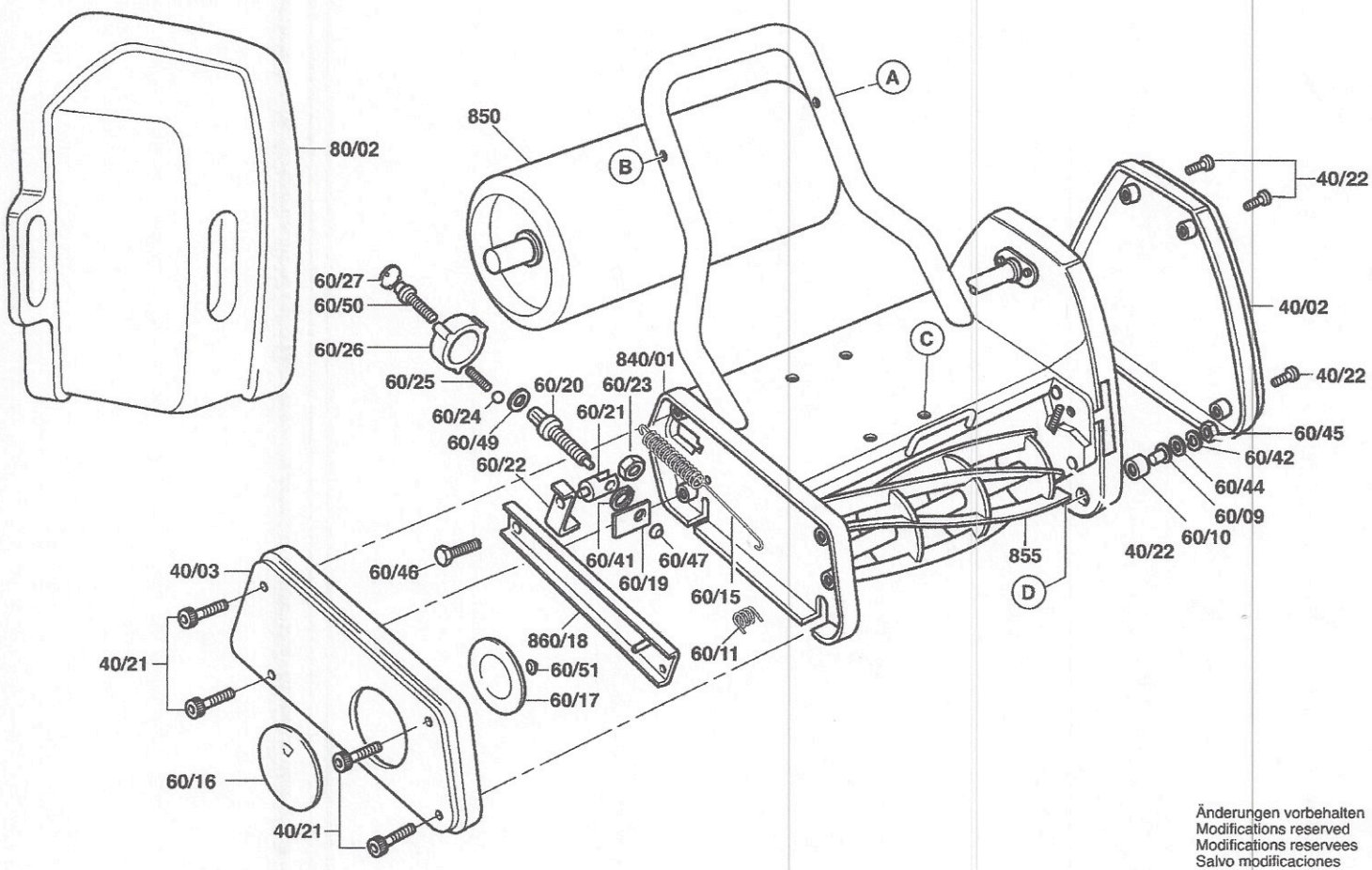

Änderungen vorbehalten
Modifications reserved
Modifications reservees
Salvo modificaciones

Steve Hancke
Allett
Allett Mowers
Turfmech Machinery Ltd
Stafford
ST18 0PJ
United Kingdom

Date: 24/07/2013
Tel: 01889 272093
Fax:
Email: steve.hancke@allett.co.uk

Service Bill of Materials: 3616C07A712

Ref	Part #	Qty	Description
40/02	F016A75398	1	Protection cover LH LH
40/03	F016A75089	1	Side Cover RH RH
40/21	F016A58228	4	Screw M6 M6
40/22	F016A58229	6	Screw M6 M6
60/09	F016A57748	1	Pivot L/H L/H
60/10	F016A57676	1	Cap
60/11	F016A57820	1	Spring
60/15	F016A57995	1	Spring
60/16	F016A57576	1	Cover
60/17	F016A57577	1	Washer
60/19	F016A75521	1	Retaining Plate
60/20	F016A58231	1	Spindle
60/21	F016A58233	1	Nut
60/22	F016A75786	1	Guide
60/23	F016A58232	1	Nut
60/24	F016T48358	1	Ball Bearing
60/25	F016T48420	1	Compression Spring
60/26	F016A58730	1	Knob
60/27	F016T48421	1	Sealing cap
60/41	F016L32612	1	Retaining clip
60/42	F016L35307	3	Spring Washer 5/16 SW SE 5/16 SW SE
60/44	F016L35411	4	Plain Washer 8,5 MM 8,5 MM
60/45	F016L35457	3	Nut M8 M8
60/46	F016T46338	1	Trunnion
60/47	F016T46684	1	Washer
60/49	F016T48359	1	Washer
60/50	F016T48457	1	Screw M 6 M 6
60/51	F016T48549	1	Set ring
80/02	F016103792	1	Catcher Container
840/01	F016103690	1	Housing
850	F016103622	1	Roller 14"
855	QCC146-EX	1	CARTRIDGE
860/18	F016103796	1	Linkage

3 616 C07 A71

Stand / Issue 07-02-14 **Fig./Abb. 3**

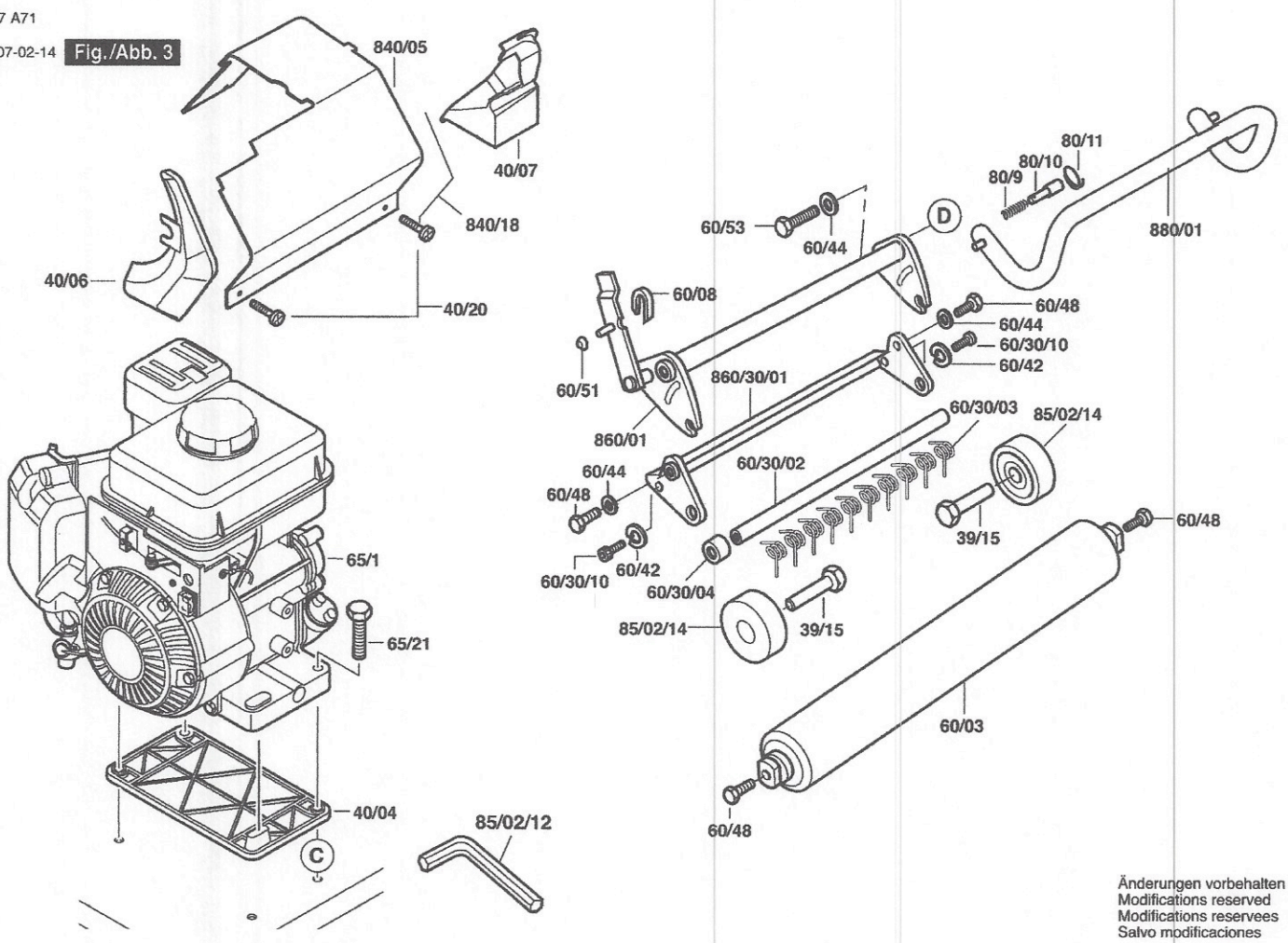

Änderungen vorbehalten
Modifications reserved
Modifications reservees
Salvo modificaciones

Steve Hancke
Allett
Allett Mowers
Turfmech Machinery Ltd
Stafford
ST18 0PJ
United Kingdom

Date: 24/07/2013
Tel: 01889 272093
Fax:
Email: steve.hancke@allett.co.uk

Service Bill of Materials: 3616C07A713

Ref	Part #	Qty	Description
39/15	F016A75784	2	Axle
40/04	F016A75702	1	Platform
40/06	F016A75707	1	Sealing cap
40/07	F016A75708	1	Sealing cap
40/20	F016A57756	3	Cross Recessed-Head Screw M5 M5
60/03	F016A75793	1	Roller
60/08	F016A57675	1	Bushing
60/30/02	F016L64557	1	Spindle
60/30/03	F016A57887	34	Spring
60/30/04	F016A57930	1	Spacer
60/30/10	F016L18120	2	Hex Screw M 6x12 M 6x12
60/48	F016T48048	4	Hex Screw M 8 M 8
60/53	F016W25213	1	Hex Screw WAS 170 WAS 170
65/21	F016A58093	2	Trunnion M8 M8
80/9	F016A58364	1	Location Pin
80/10	F016A58365	1	Spring
80/11	F016A58366	1	Retaining snap ring
840/05	F016103693	1	Protective Cover
840/18	F016102983	1	Seal Strip
860/01	F016103695	1	Carrier
860/30/01	F016103698	1	Spare Part
880/01	F016103779	1	Support Tube

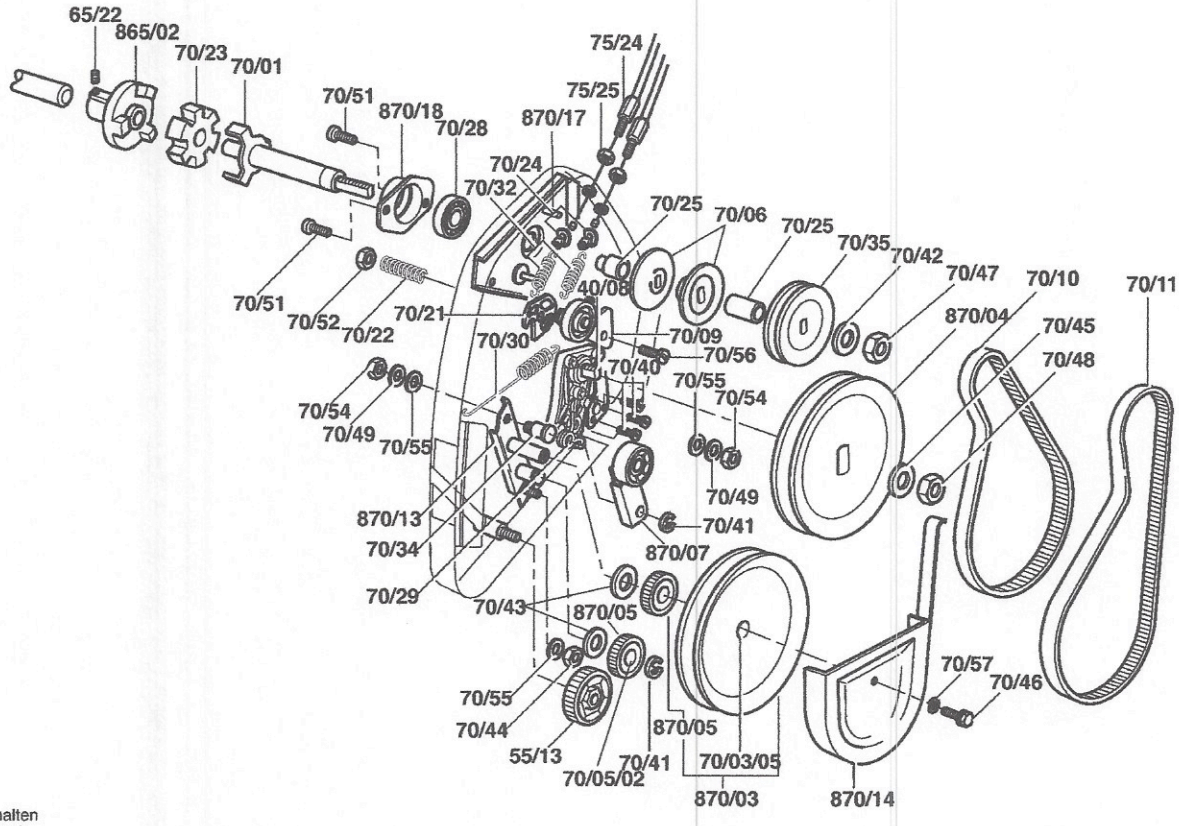

Änderungen vorbehalten
Modifications reserved
Modifications reservees
Salvo modificaciones

Steve Hancke
Allett
Allett Mowers
Turfmech Machinery Ltd
Stafford
ST18 0PJ
United Kingdom

Date: 24/07/2013
Tel: 01889 272093
Fax:
Email: steve.hancke@allett.co.uk

Service Bill of Materials: 3616C07A714

Ref	Part #	Qty	Description
55/13	F016A57590	1	Cylinder Toothed Gear
65/22	F016L20896	2	Screw
70/01	F016A75665	1	Drive Shaft
70/03/05	F016A57764	1	Bushing
70/05/02	F016A57761	1	Bushing
70/06	F016A58726	2	Pulley 46 MM 46 MM
70/10	F016A58728	1	Roller Drive Belt
70/11	F016A57941	1	Cylinder Drive Belt
70/21	F016A58315	1	Spacer
70/22	F016A58316	1	Spring
70/23	F016L09518	1	Coupling
70/24	F016L66172	2	Support
70/25	F016A57780	3	Spacer
70/28	F016A57838	1	Ball Bearing
70/29	F016A58531	1	Governor Spring
70/30	F016A58530	1	Governor Spring
70/32	F016L08487	2	Spring
70/34	F016A58422	1	Journal
70/35	F016L09227	1	Pulley
70/41	F016A57759	2	Spring retaining ring
70/42	F016L35411	1	Plain Washer 8,5 MM 8,5 MM
70/43	F016A58725	2	Plain Washer M 16 M 16
70/44	F016L11218	1	Self-locking nut M8 M8
70/45	F016L17849	1	Plain Washer
70/46	F016L18120	1	Hex Screw M 6x12 M 6x12
70/48	F016L23210	1	Nut M12 M12
70/49	F016L35307	2	Spring Washer 5/16 SW SE 5/16 SW SE
70/51	F016L35387	2	Self-Cutting Screw M6 M6
70/52	F016L35388	1	Self-locking nut M6 M6
70/54	F016L35457	2	Nut M8 M8
70/55	F016T42988	2	Washer
70/56	F016T48017	1	Trunnion
70/57	F016L35389	1	Locking Washer
75/24	F016A75826	1	O-Ring
870/03	F016102377	1	Pulley & Gear
870/04	F016103221	1	Roller Pulley
870/05	F016102379	1	Toothed Gear
870/07	F016102282	1	Roller
870/13	F016102977	1	Gear Support S/A S/A
870/14	F016102818	1	Guide Piece
870/17	F016103154	1	Release Disc
870/18	F016103153	1	Bearing Holder

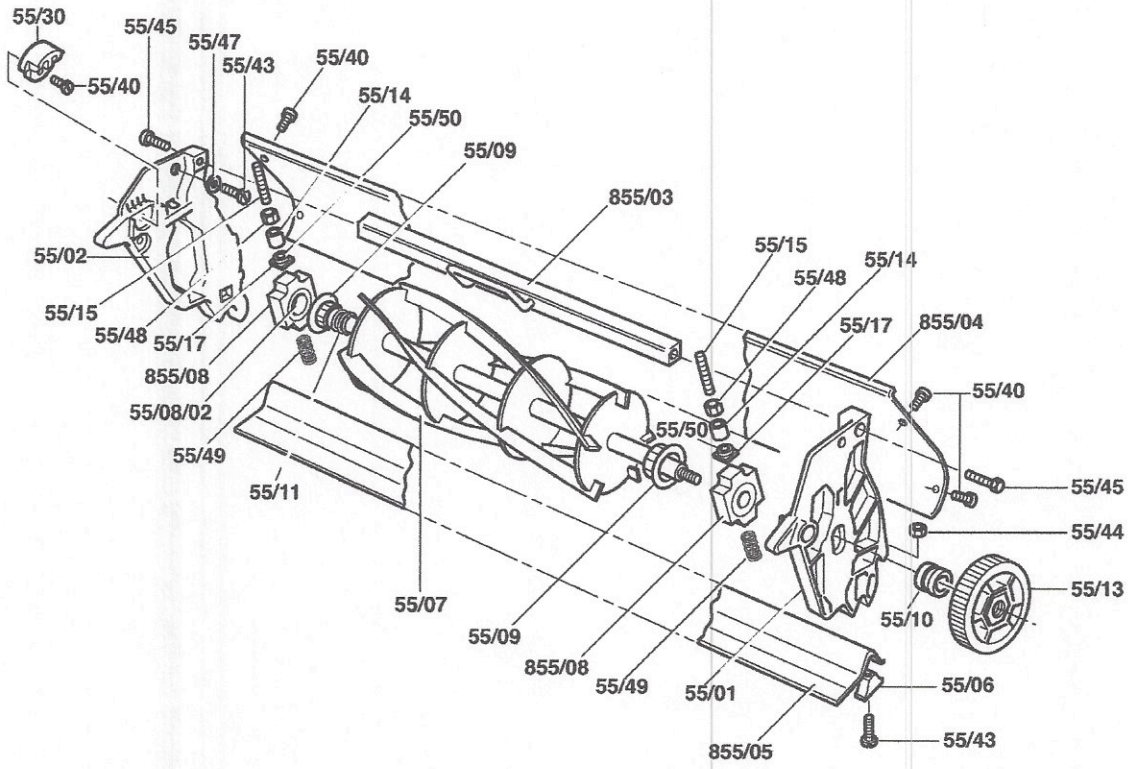

Änderungen vorbehalten
Modifications reserved
Modifications reservees
Salvo modificaciones

Steve Hancke
Allett
Allett Mowers
Turfmech Machinery Ltd
Stafford
ST18 0PJ
United Kingdom

Date: 24/07/2013
Tel: 01889 272093
Fax:
Email: steve.hancke@allett.co.uk

Service Bill of Materials: 3616C07A715

Ref	Part #	Qty	Description
55/01	F016A75001	1	Side Plate L/H L/H
55/02	F016A75002	1	Side Plate R/H R/H
55/06	F016A75065	2	Spacing Block
55/07	F016A58818	1	Spindle
55/08/02	F016A58741	2	Bearing
55/09	F016A58854	2	Shield
55/10	F016A58855	1	Sleeve
55/11	F016A58856	1	Clamping Spring
55/14	F016A57669	2	Adjusting Part
55/15	F016A57713	1	Adjusting Screw
55/17	F016T41057	2	Square Shaft
55/30	F016A58811	2	Buffer
55/40	F016A57756	6	Cross Recessed-Head Screw M5 M5
55/43	F016A58229	2	Screw M6 M6
55/44	F016L35388	2	Self-locking nut M6 M6
55/45	F016T49288	2	Screw M6x25 Hex M6x25 Hex
55/48	F016L35457	2	Nut M8 M8
55/49	F016T47205	2	Spring
55/50	F016T49443	1	Washer
855/03	F016102967	1	Handle
855/04	F016103707	1	Deflector Plate
855/05	F016101509	1	Lower Blade
855/08	F016102805	2	Bearing Housing Assembly

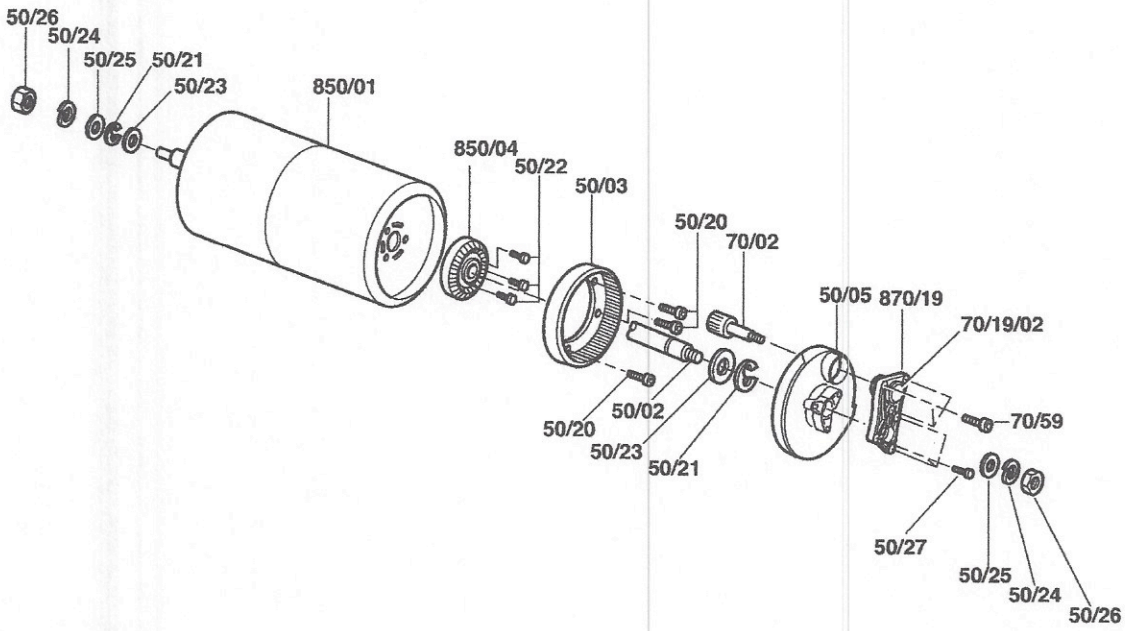

Änderungen vorbehalten
Modifications reserved
Modifications reservees
Salvo modificaciones

Steve Hancke
Allett
Allett Mowers
Turfmech Machinery Ltd
Stafford
ST18 0PJ
United Kingdom

Date: 24/07/2013
Tel: 01889 272093
Fax:
Email: steve.hancke@allett.co.uk

Service Bill of Materials: 3616C07A716

Ref	Part #	Qty	Description
50/02	**F016A75327**	1	Spindle **14"**
50/03	**F016A57635**	1	Ring
50/05	**F016A75404**	1	Cover Plate
50/20	**F016A57756**	3	Cross Recessed-Head Screw M5 **M5**
50/21	**F016A58860**	2	Set ring
50/22	**F016A58178**	6	Rivet Pin
50/23	**F016A58725**	2	Plain Washer M 16 **M 16**
50/24	**F016L35307**	2	Spring Washer 5/16 SW SE **5/16 SW SE**
50/25	**F016L35411**	2	Plain Washer 8,5 MM **8,5 MM**
50/26	**F016L35457**	2	Nut M8 **M8**
50/27	**F016T49429**	3	Self-Cutting Screw 4x19 MM **4x19 MM**
70/02	**F016102295**	1	Shaft
70/19/02	**F016A57764**	2	Bushing
70/59	**F016T49429**	3	Self-Cutting Screw 4x19 MM **4x19 MM**
850/01	**F016103214**	1	Roller
870/19	**F016103210**	1	Holder