UPLIFT86

Rotary Mower 86cm

OPERATOR & PARTS MANUAL

(F016J11578 Issue A – Nov 2018)

English version – Original instructions

Allett Ltd
Regal House, Airfield Industrial Estate, Hixon, Stafford, ST18 0PF, United Kingdom
Tel: +44 (0) 1889 271503
Fax: +44 (0) 1889 271321

For Allett spare parts
Tel: +44 (0) 1889 272095
Fax: +44 (0) 1889 271321

Sales@allett.co.uk
www.allett.co.uk

READ THIS MANUAL BEFORE USING AN ALLETT UPLIFT86 ROTARY MOWER.

YOUR SAFETY IS INVOLVED

IT IS ESSENTIAL THAT OPERATORS STUDY THIS DOCUMENT FOR THEIR OWN SAFETY.

Contents

1.0 Introduction

The Allett Wide Area Rotary Mower 86cm (Uplift) has been specifically designed to collect debris from large areas of professional sports turf and sports Stadiums.

The walk behind pedestrian lawn mower is powered by a petrol engine. It is self-propelled via a V belt clutch driving a 5 speed gearbox. The final reduction to the land roll is chain driven. The land roll has an internal geared differential. Power is transferred to the cutting blades from a blade brake clutch via a V belt and a toothed timing belt drive.

The Uplift86 mower is designed for the management of high-quality turf. Use in any way other than that stated is considered contrary to the intended use. Compliance and strict adherence to the conditions of operation, service and repair as specified in this manual also constitute essential elements of the intended use.

The way in which the Uplift86 mower is operated and maintained will have a profound effect on its performance and reliability.

A Uplift86 mower should be operated, serviced and repaired only by persons who are familiar with its particular characteristics and who are familiar with the relevant safety procedures.

The safety precautions outlined in this manual and all other generally recognised regulations on safety must be observed at all times.

Any modifications carried out to a Uplift86 mower will relieve Allett Ltd of liability for any resulting damage or injury.

This manual is based on information available at the time of publication.

Allett Ltd reserves the right to amend product specifications without prior notification.

1.1 Model type and serial number

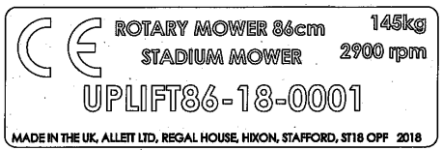

The model can be found in two places:

1. On the grass chute of the mower.
2. On the serial number plate located on the right side of the mower chassis.

The serial number can be found on the serial plate.

Please enter your information below

Model:

Serial Number:

2.0 Pictograms and Decals

Fast engine speed

Slow engine speed

Refer to operator's manual for information

Engine STOP position

- WARNING: Sharp blades
- Do not touch rotating blades. The blades continue to rotate after the mower is switched off
- Refer to manual before carrying out maintenance
- WARNING: Beware of thrown of flying objects to bystanders
- Keep bystanders a safe distance away from the machine

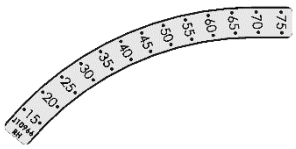

Height of cut in mm
(25mm ≈ 1")

Guaranteed Sound power level emitted by the mower

Park brake

Height of cut adjustment

↻Clockwise rotation to cut higher
↺ Anticlockwise rotation to cut lower

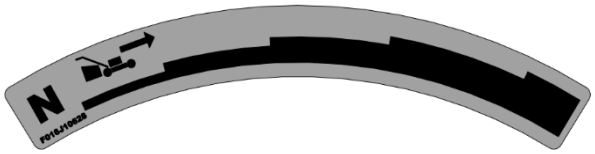

5 speed transmission and Neutral (N) position

3.0 Safety notes

Read these instructions carefully, be familiar with the controls and the proper use of the lawnmower.
Learn how to stop the lawnmower quickly in an emergency.

Never allow children or people unfamiliar with these instructions to use the lawnmower. Local regulations may restrict the age of the operator.
Never mow while people, especially children or pets are nearby
Never pick up or carry the lawnmower while the engine is running.
Keep in mind that the operator or user is responsible for accidents or hazards occurring to other people or their property.
Whilst mowing, always wear substantial footwear and long trousers. Do not operate the equipment when barefoot or wearing open sandals.

Wear appropriate protective clothing and equipment when you are operating the lawnmower, such as safety glasses, long trousers, substantial footwear and ear protection. Long hair, loose clothing or jewellery can get tangled in moving parts.
Thoroughly inspect the area where the lawn mower is to be used and remove all objects that may be thrown by the machine.
WARNING - petrol is highly flammable.
- Store fuel in containers especially designed for this purpose
- Refuel outdoors only and do not smoke while refuelling
- Add fuel before starting the engine. Never remove the cap of the fuel tank or add petrol whilst the engine is running, or the engine is hot.
- If petrol is spilt, do not attempt to start the engine, move the machine away from the area of spillage and avoid creating any source of ignition until petrol vapours have dissipated.
- Replace the fuel tank and container caps securely
- Replace faulty silencers
- Do not operate the engine in a confined space where dangerous carbon monoxide fumes can collect.
- Before using, always visually inspect to see that the cutting blades are not worn or damaged.
Mow only in daylight or in good artificial light.
Avoid operating the lawnmower in wet grass, where feasible.
Always be sure of your footing on slopes.
Walk, never run.
Mowing on banks can be dangerous:
- Mow across the face of sloes – never up and down.
- Be particularly careful of your footing on slopes or wet grass.
Exercise extreme caution when changing direction on slopes.
Do not mow excessively steep slopes.
- Use extreme caution when stepping back or pulling the lawnmower towards you.
Stop the blades if the lawnmower has to be tilted for transportation when crossing surfaces other than grass and when transporting the lawnmower to and from the area to be mowed.
Do not tilt the lawnmower when engaging the blades, except if the lawnmower has to be tilted for starting in long grass. In this case, do not tilt it more than absolutely necessary and lift only the part which is away from the operator. Always ensure that both hands are in the operating position when returning the mower to the ground.
Never operate the lawnmower with defective guards or without the safety devices, for example deflectors and grass catchers in place.
Do not change the engine governor settings or over speed the engine. Operating an engine at excessive speed may increase the hazard of personal injury.
Disengage all blade drive clutches before starting the engine

Start the engine carefully according to instructions and with feet well away from the blades. Do not tilt the mower when starting. Keep clear of the discharge opening at all times. Never pick up or carry a lawnmower while the engine is running.
Do not put hands or feet near or under rotating parts while the lawnmower is being operated.
Stop the engine and disconnect the spark plug lead:
- Before checking, cleaning or working on the lawnmower
- After striking a foreign object, inspect the lawnmower for damage and make repairs before restarting and operating the lawnmower.
- If the lawn mower starts to vibrate abnormally (check immediately).
- Before making height of cut adjustment

Stop the engine:
- Whenever you leave the machine
- Before refuelling
- Before checking blockages
- Before making a height of cut adjustment

Reduce the throttle setting during engine shut-down and turn the fuel off at the conclusion of mowing.
Keep all nuts, bolts and screws tight to be sure that the lawnmower is in safe working condition.
Never store the lawnmower with petrol in the tank inside a building where fumes may reach an open flame or spark.
Allow the engine to cool before storing in any enclosure.
To reduce the fire hazard, keep the engine, silencer and fuel storage area free of grass, leaves or excessive grease.
Check the grassbox frequently for wear or deterioration.
Replace worn or damaged parts for safety.
Go slow when using a trailing seat (where available), especially when cornering.
If the fuel tank has to be drained, this should be done outdoors.
Be careful during the adjustment of the lawnmower to prevent entrapment of the feet and hands between moving blades and fixed parts of the lawnmower.
Ensure replacement parts fitted are manufacturer's original or approved by the manufacturer.

4.0 Assembly

🛠Tools required: 19mm spanner
22mm spanner
13mm spanner x 2

4.1 Fitting the right and left hand wheel assemblies

Use a 19mm and 22mm spanner to tighten up both the M12 Nyloc nuts (to approximately 90Nm)

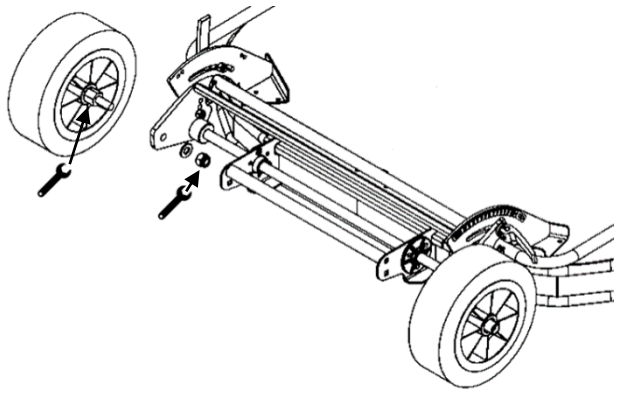

4.2 Unfolding the upper handle bar

1) Unfold and align holes in both handle bars
2) Pass the tie bar through the holes and secure with the plastic wing nut
3) Tighten both wing nuts each side by hand

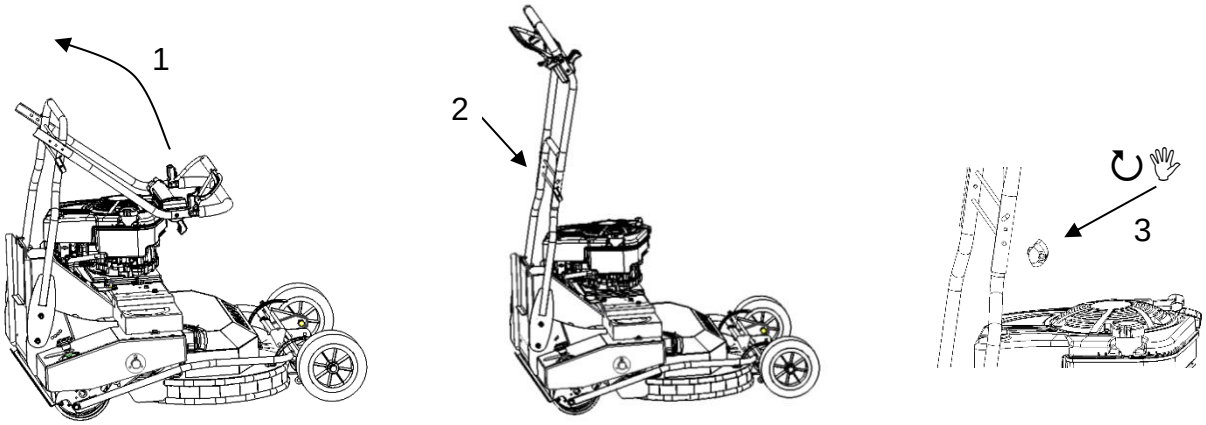

4.3 Unfold the lower handle bar

1) Use 2 x 13mm spanners to undo both the lower M8 Nyloc nuts
2) Move the lower handle bar into a comfortable position for the operator
3) Secure the M8 fasteners in the appropriate hole (tighen to approx 30Nm)

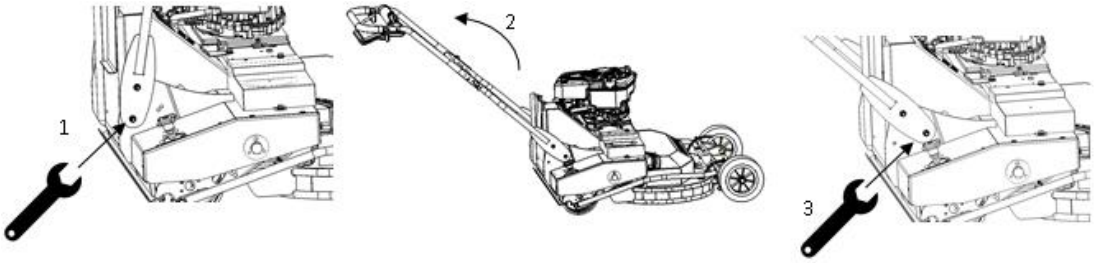

4.4 Attaching the cable clips

Make sure all cables are securely fastened to the handlebars using the cable clips provided

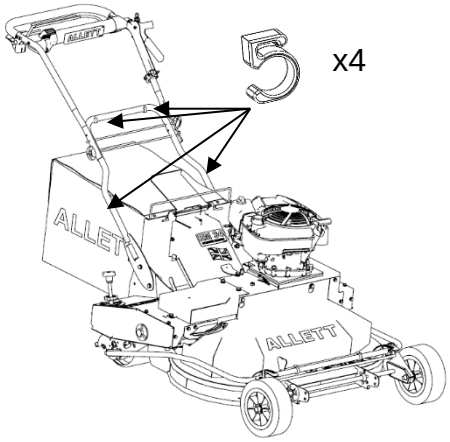

4.5 Fitting the grass bag

1) Lift the flap and pass it through the grass bag handle
2) Fit the grass bag by lowering the frame into the slots on the mower

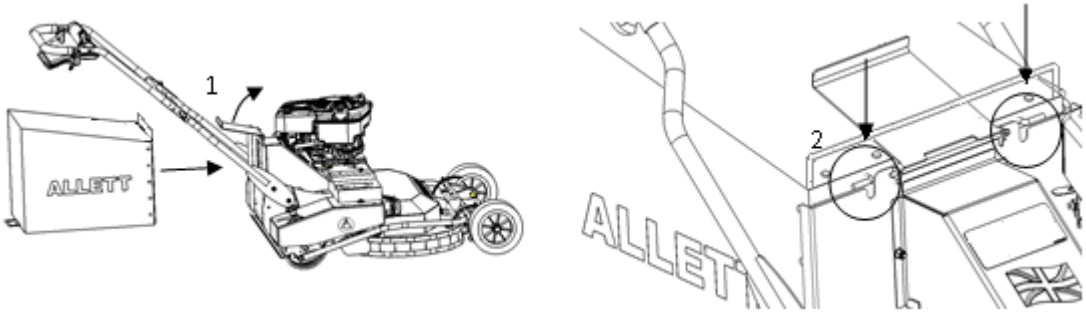

DO NOT operate with out the grass bag fitted or the optional “cut and drop shoot” in place

5.0 Operating controls

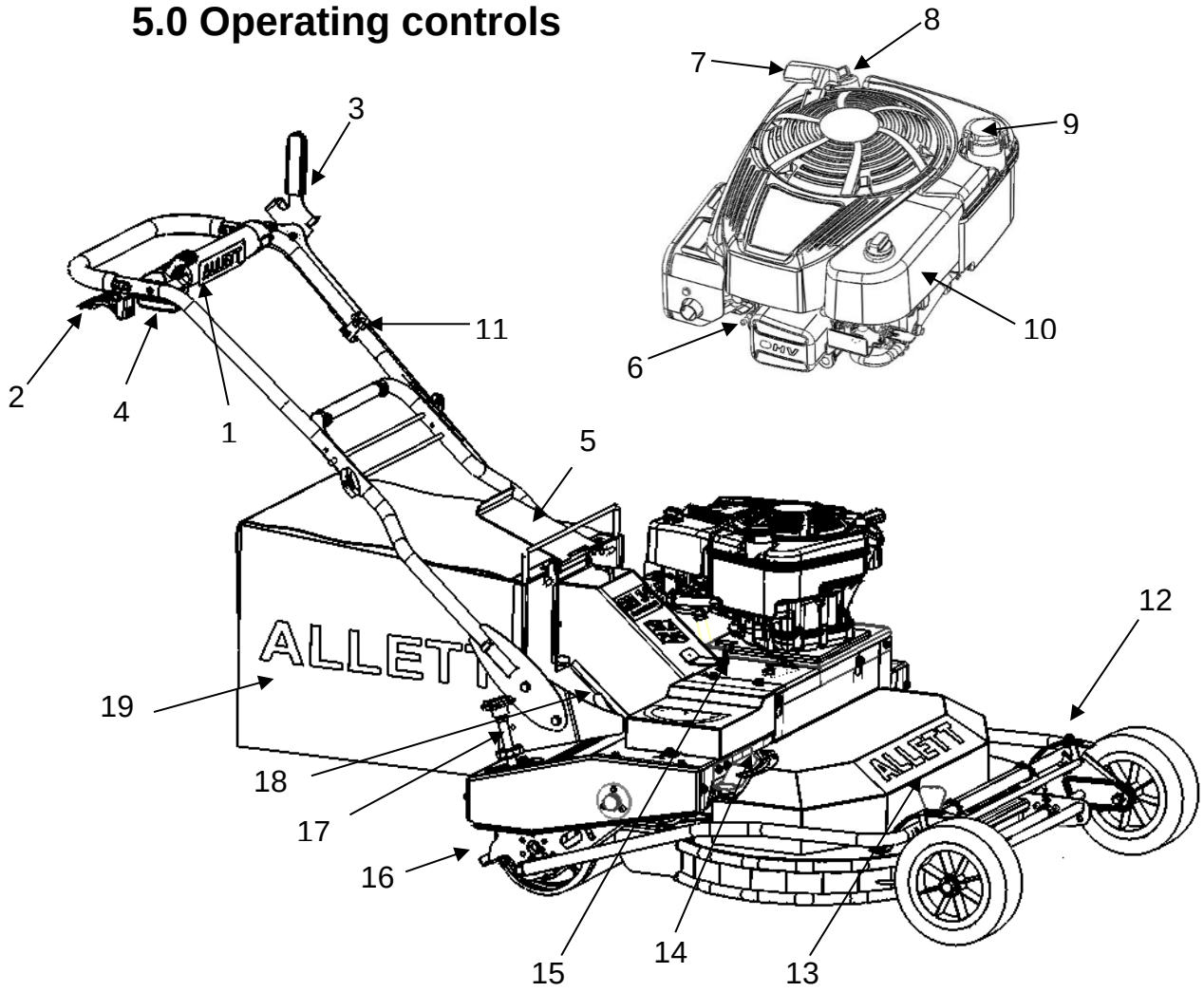

1) Throttle & engine stop lever
2) Safety/Operator presence lever
3) Blade engagement lever
4) Land roll engagement lever
5) Flap
6) Spark plug
7) Starter grip
8) Oil dipstick & filler cap
9) Fuel filler cap
10) Air filter
11) Cable adjuster - Blade brake clutch
12) Height of cut indicator & clamp
13) Scraper/prop
14) Gear lever
15) Cable adjuster – Land drive clutch
16) Rear roller scraper
17) Height of cut adjuster
18) Park brake
19) Grass bag

6.0 Using your mower

6.1 Starting the engine

Check the oil level and fill with petrol before starting – See maintenance section

The Briggs and Stratton engine fitted to the Uplift86 has a ReadyStart ® System. This features a temperature controlled automatic choke. It does not have a manual choke or primer. To start the engine, proceed as follows:

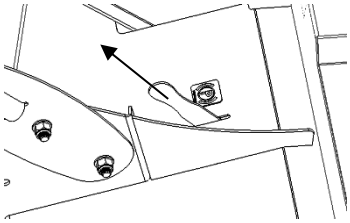

Engage the Park brake by pulling the lever and latching it in place

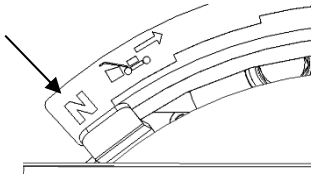

Select Neutral (N) with the gear lever

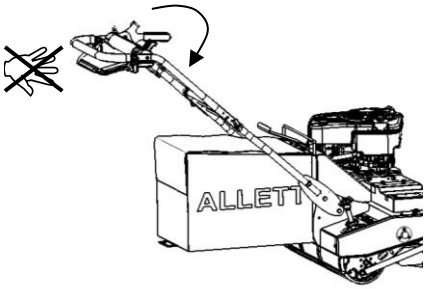

DO NOT hold the blade engagement, land roll or safety lever. Make sure the blade engagement lever is in the furthest forward position and the blades are not engaged otherwise the engine will not start

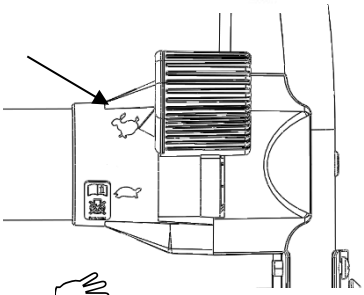

Position the throttle in the Hare position

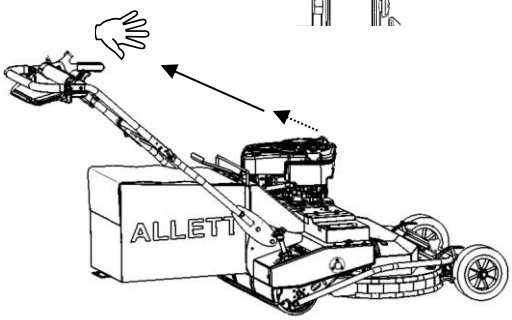

Firmly hold the starter cord handle. Pull the starter cord handle until resistance is felt, then pull rapidly. Return the starter cord handle gently to the engine

6.2 Stopping the engine

To stop the engine, proceed as follows:

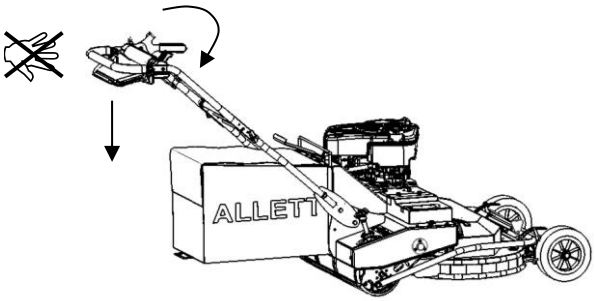

Disengage the red blade engagement lever to stop the blades

Release the land drive lever to stop the forward travel

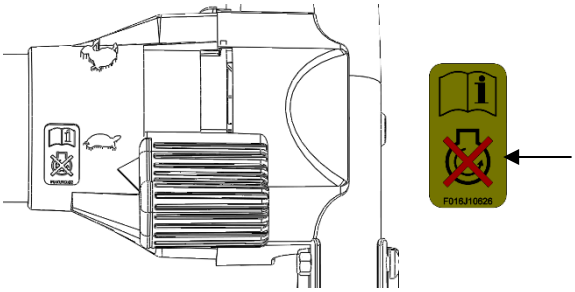

Move the throttle lever to the furthest back position, this will STOP the engine

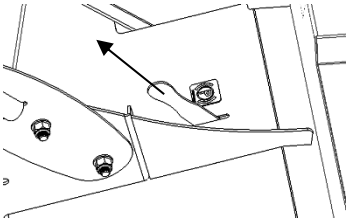

Engage the Park brake by pulling the lever and latching it in place

6.3 Height of cut adjustment

The Uplift86 uses 2 micro height adjusters to move the front wheels and rear roller simultaneously. This gives infinite control of the cut height.

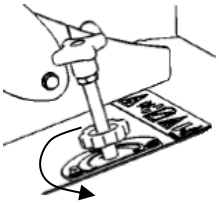

Loosen the lower adjuster lock on both sides

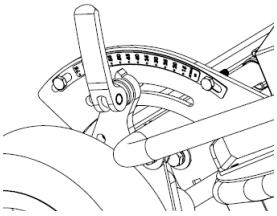

Release Front adjuster clamp locks on both sides

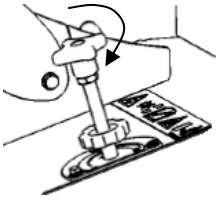

Turn the hand wheels: ↻Clockwise to cut higher
↺ Anticlockwise to cut lower

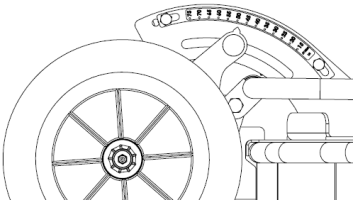

Briefly tilt the mower back and return it to the ground again to check the indicators read the same.

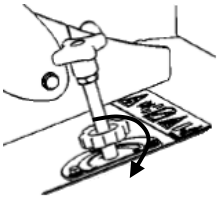

Tighten the adjuster lock on both sides

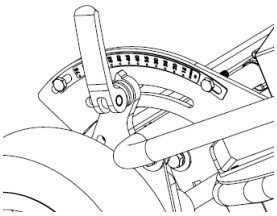

Lock front adjuster clamps on both sides

Tips:

When collecting debris for the optimum performance set the height of cut just above the grass height.

For best results adjust the height of cut on a flat level surface.

Because of the high vacuum effect created by the blades it may be necessary to set the height of cut to be greater than normal then gradually reduce to meet the desired cut height.

6.4 Engaging drive to the cutting blades

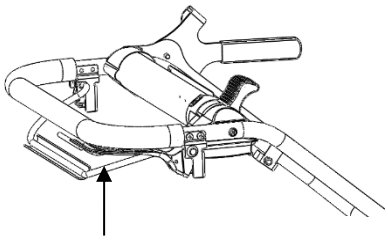

Lift the safety/operator presence lever to the handle bar and continue to hold it all the time whilst mowing

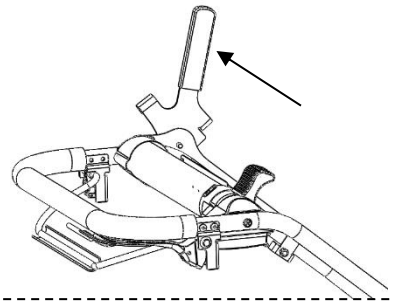

Pull back the blade engagement lever so that it locks over centre. Before moving forward, wait for 3 seconds to allow the blades to reach full speed.

Note: Releasing the safety/operator presence lever when the blades are engaged will stop the engine

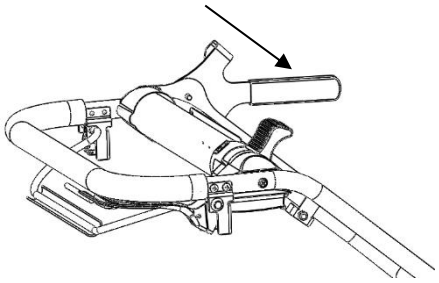

To disengage the blades, push the red lever forwards

6.5 Engaging drive to the land roll

When mowing, engage the blades first, then engage the forward drive.
When transporting the mower between work areas it is only necessary to engage the forward drive only. Proceed as follows:

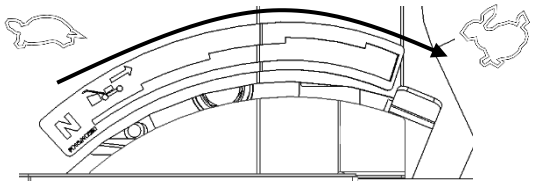

Select the appropriate gear. The fastest 5th gear is located beyond the deck guard as shown here

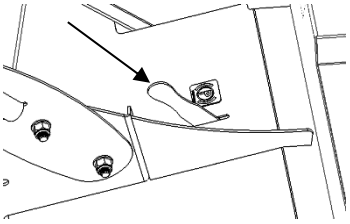

Disengage the Park brake by unlatching the lever and pushing it down

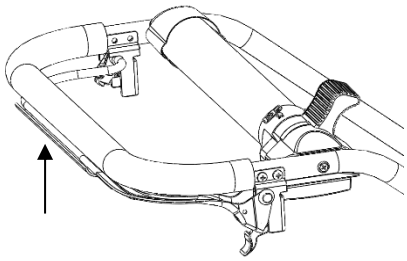

Lift the land drive engagement lever so that it meets the handlebar and continue to hold it to move forward.

Tip: When collecting heavy debris or cutting longer grass a slower forward speed will improve performance.

6.6 Park brake

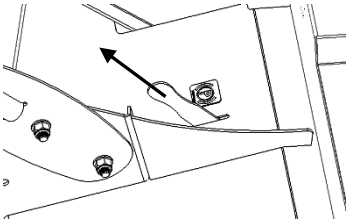

Engage the Park brake by pulling the lever.

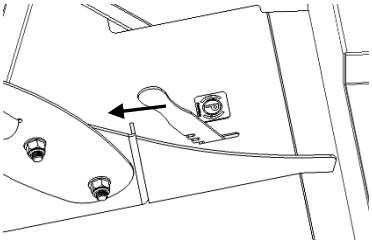

Whilst pulling the lever move it in the direction of the handlebars. This will latch it in one of the slots provided.

7.0 Maintenance

WARNING – Stop the engine, remove the spark plug cap and apply the Park brake before carrying out any maintenance procedure detailed here. Always make the mower SAFE before carrying out any maintenance.

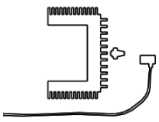

To ensure long and reliable service, carry out the following maintenance regularly:

Regularly check for obvious defects such as a loose, dislodged or damaged blades, loose fixings and worn or damaged components.

Check that covers and guards are undamaged and correctly fitted, this should also include the grass bag. Carry out necessary maintenance or repairs before use.

Clean the exterior of the machine thoroughly using a soft brush and cloth. Remove all debris, especially from the air filter and engine fins.

If the mower should happen to fail despite the care taken in manufacture and testing, repair should be carried out by an authorised Allett dealer.

7.1 Adjusting land drive clutch cable

If the mower does not drive adequately when the clutch drive lever is held against the handle bars it may be necessary to adjust the land drive cable. Proceed as follows:

🛠Tools required: 10mm spanner x 2

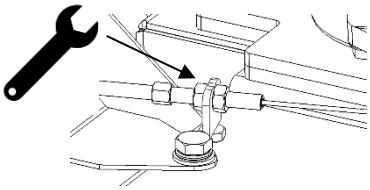

Using a spanner loosen the lock nuts

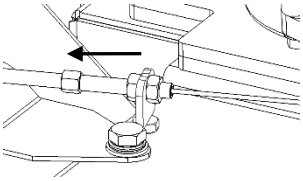

Move the adjuster OUT in the direction shown. Make adjustments in small increments checking progress by operating the machine.

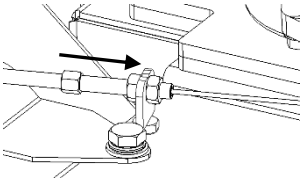

If the mower creeps forward before the clutch drive lever is operated, move the adjuster IN towards the front of the machine.

Tighten the fasteners

7.2 Adjusting blade brake clutch cable

To operate correctly, the clutch needs a 23kg (50Lb) load to be applied. This is applied via the spring and clutch cable.

IMPORTANT: The blade brake clutch has been factory set, a maintaining spring has been fitted to keep the correct load applied to the clutch. Incorrect adjustments will result in damage to the machine.

If the collection performance drops or the blades are slow to engage, first check the load applied to the clutch. The blade brake clutch has been marked to show the position of the activation lever when the correct load is applied.

To check the clutch load proceed as follows:

Make the mower safe, then tilt it back to view the clutch.

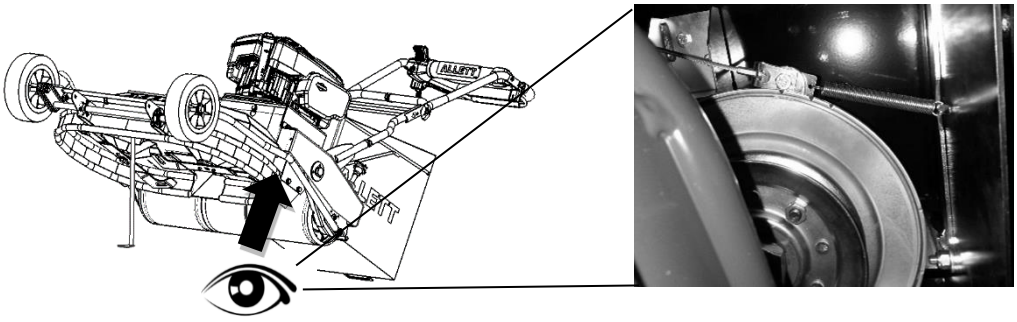

With the blade engagement lever pulled back, make sure the centre of the screw head is aligned with the ‘run’ mark as shown below:

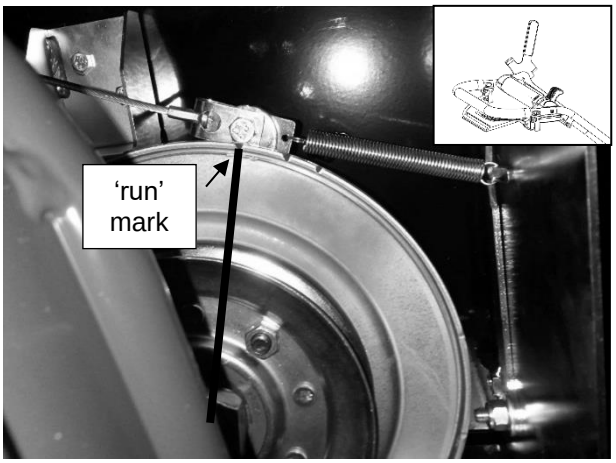

23kg (50Lbs) pull from spring

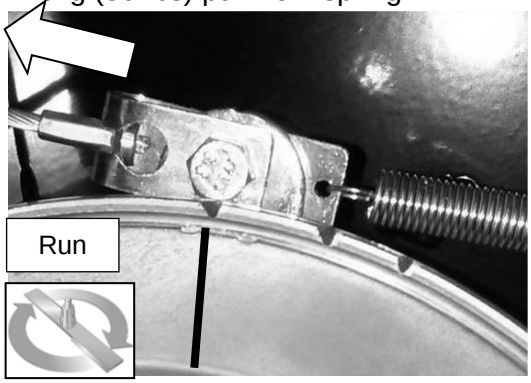

Release the blade engagement lever, make sure the centre of the screw head is in the brake zone as shown below:

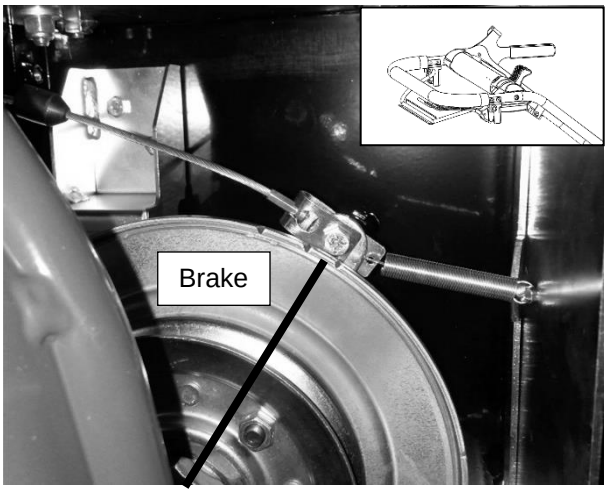

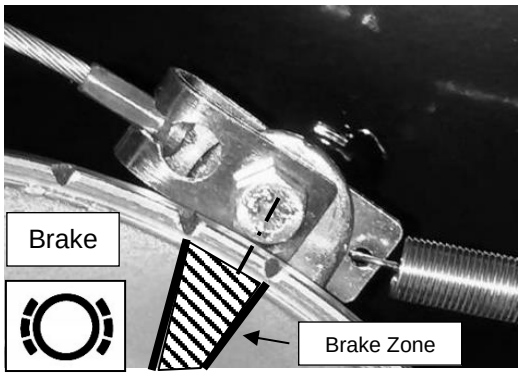

If necessary, to apply more force to the clutch proceed as follows:

🛠Tools required: 17mm spanner x 2

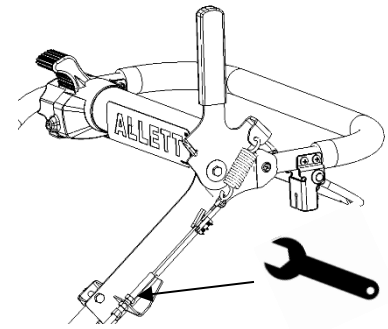

Using a spanner loosen the lock nut.

⇩

Move the adjuster <u>DOWN</u> in the direction shown. Make adjustments in small increments until the screw head is aligned with the ‘run’ mark on the clutch.

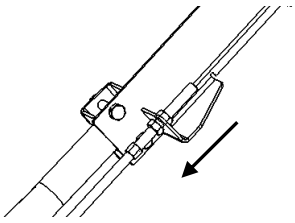

✓

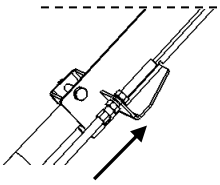

If the blades turn before the clutch drive lever is operated, move the adjuster UP towards the handle bar. Making sure the screw head is with in the 'brake zone'

This mower is fitted with a blade brake clutch. When the blade clutch lever is disengaged the brake device ensures that the blades rapidly come to a stop. For safety reasons it is important that the function of this device is checked daily. Check that the blades start to rotate when the clutch lever is engaged and that they stop rapidly when it is released. Make adjustments if necessary as outlined in section 7.2 above

7.3 Cable midway adjuster

If the mower does not drive forwards adequately it may be necessary to adjust the cable as follows using the midway adjuster:

🛠Tools required: 8mm spanner x 1
11mm spanner x 1

1) Slacken lock nut
2) Turn the adjuster a few times clockwise
3) Retighten the adjuster with the lock nut

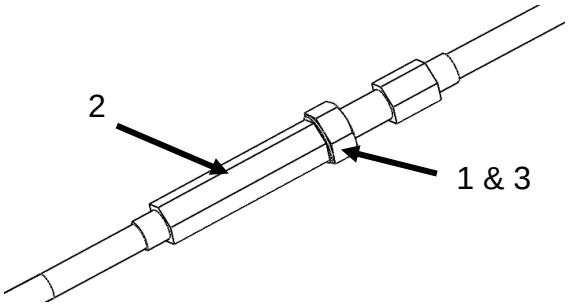

7.4 Checking the engine oil

Change the engine oil after the first 5 hours of use. The oil should then be changed every 50 hours or at the end of each season before storage, whichever is sooner.

1) Clean the area around the combined dipstick and filler cap
2) With the mower standing on level ground, unscrew and remove the engine oil filler dipstick (8)
3) Wipe the oil filler dipstick clean: insert the oil dipstick, SCREW IT IN then remove it again.
4) Check the oil level
5) Add a good quality **SAE 10W-30** oil in small quantities at a time, allowing it to settle. Repeatedly add oil and check the level until it reaches the upper limit.

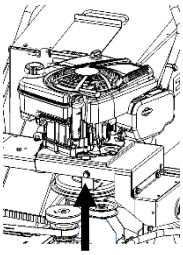

Oil drain plug – accessed through a cut out under engine plate

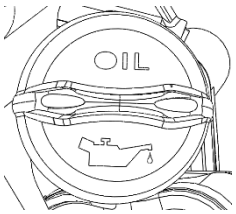

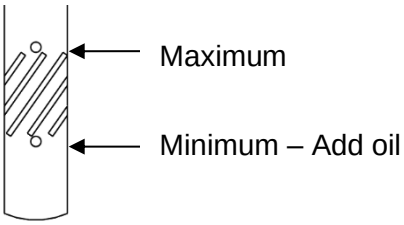

SAE 10W-30 oil is recommended for general use. It is important to use the recommended oil to avoid damage to your engine. Engine oil capacity is 0.6L

7.5 General engine maintenance

Check and clean the air filter (10), replace if necessary. See engine manual for details.
Check and clean the fuel sediment bowl and spark plug. See engine manual for details.
For all other engine adjustments and maintenance refer to the engine manual.

7.6 Fuel

Petrol deteriorates over time. Engine starting may be difficult if you use petrol that is more than 30 days old. Always run the fuel tank dry when storing for over 30 days or use a Briggs and Stratton fuel stabiliser additive. Fuel tank capacity is 1.1L

Stop the engine before refuelling – petrol is highly flammable
1) Clean the area around the fuel filler cap
2) Remove the petrol filler cap (9), slowly add unleaded petrol to the tank, DO NOT fill above the bottom of the fuel tank neck.
3) Replace petrol filler cap
4) Wipe up any spilt petrol from the engine before starting the mower

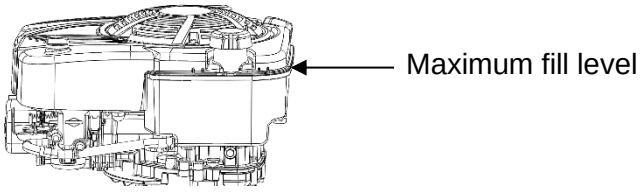

7.7 Grease points

A) Grease both spindles with 1-2 pumps of grease every 1-2 weeks.
B) Smear grease or light oil on the height adjuster threads and drive chain every 1-2 weeks
C) The 5 speed transmission should remain sealed, if lubrication should be needed use an Extreme Pressure (EP) grease. When empty the transmission takes approximately 0.5kg of grease
D) Grease front wheel bearings with 1-2 pumps of grease every 1-2 weeks.

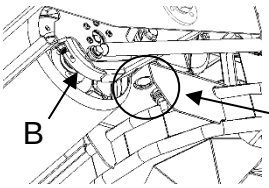

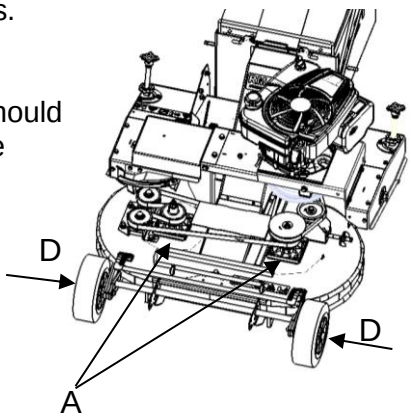

7.8 Checking blade condition

The cutting performance of the Uplift86 is highly dependent on the condition of the blades. Poorly maintained parts will lead to a poor quality of cut. Cutting regularly in sandy conditions will accelerate blade wear, so blade condition should be checked more frequently.

Excessively worn, chipped, bent or cracked blades should be replaced.

To check the blade condition:

Make the mower SAFE then tilt the mower back then use the prop/scraper to secure the deck in a tilted position. Make sure the prop is placed securely under the front of deck.

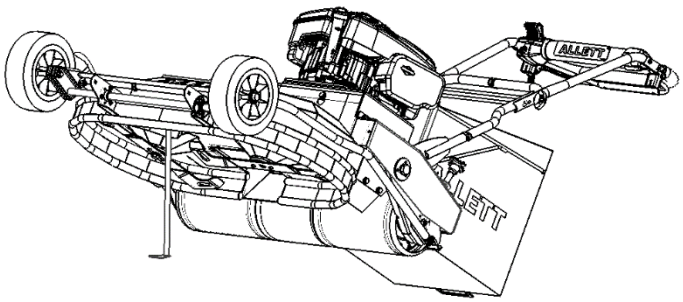

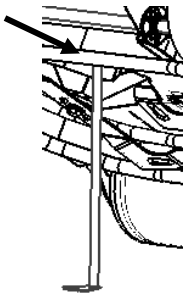

A new blade has an approximate 10 degree twist at each end and a bevel of 30 degrees for the cutting edge.

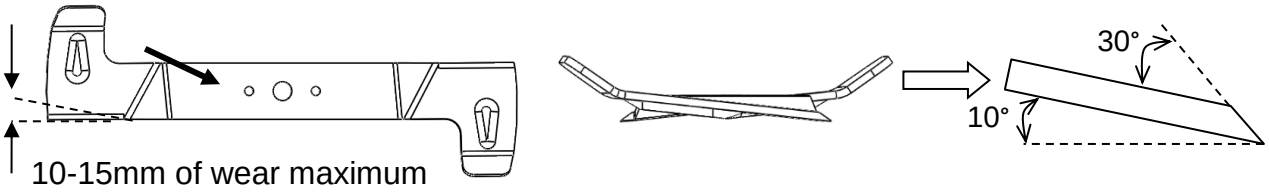

Tip: inspecting the cut plant is a good indicator of blade condition. If a “beard” can be seen it is time for sharpening or fitting a new blade.

Sharpen or fit a new blade

7.9 Blade removal

Make the Mower SAFE then tilt the mower to gain better access to the blades and securely chock it in place.

🛠Tools required: 19mm A/F socket and Torque bar

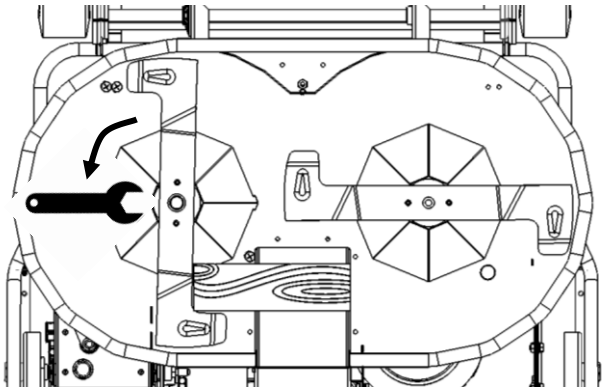

Place a block of wood approximately 250mm (10”) in length as shown to prevent the blade from turning

Remove only the central blade screw using a 19mm socket, keep the flat washer and spring washer

7.10 Blade fitting

Make the mower SAFE then tilt the mower to gain better access to the blades and securely chock it in place.

🛠Tools required: 19mm A/F socket and 90Nm Torque wrench

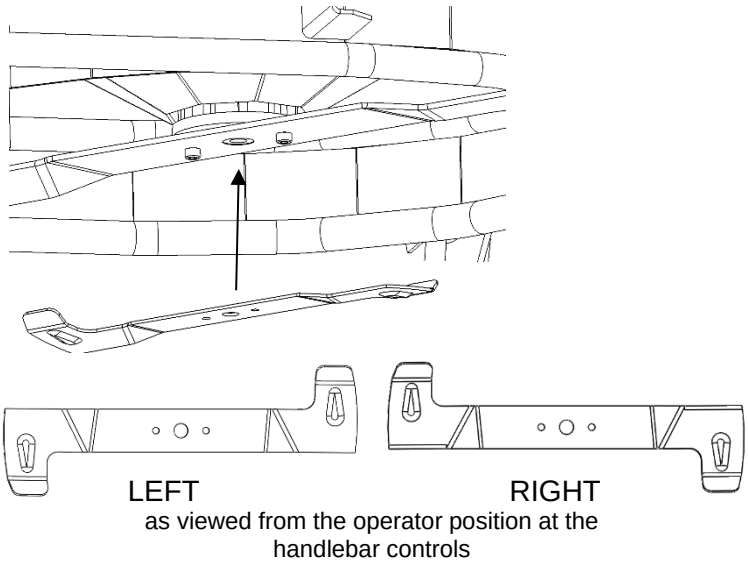

Clean the blade mounting surfaces. Fit the blade over the central boss and the two cap head screws.

Fit the blades with the fins facing up. The blades have a LEFT and RIGHT hand version as shown.

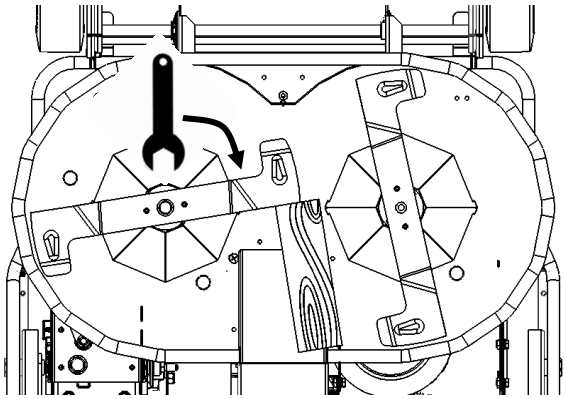

Refit the central flat washer, spring washer and M12 Screw

Place a block of wood approximately 250mm (10”) in length as shown to prevent the blade from turning

Tighten the central screw to 90Nm using a torque wrench

7.11 Blade sharpening

Blades with dull cutting edges can be sharpened. To sharpen a blade file or grind the top face along the cutting edge only. Maintain the original 30 degree bevel.

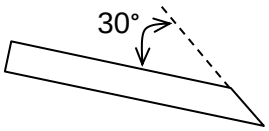

It is important to file or grind both ends of the blade evenly to maintain a balanced blade. Check the blade is balanced before refitting it, to do this place a screwdriver through the central hole. If either side of the blade falls below the horizontal, this side needs more material to be taken off.

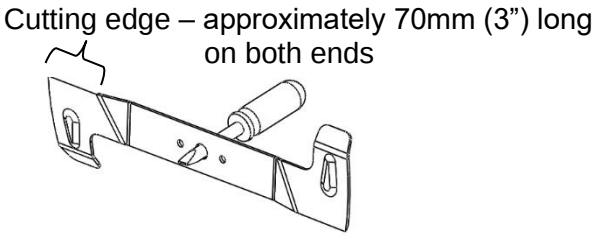

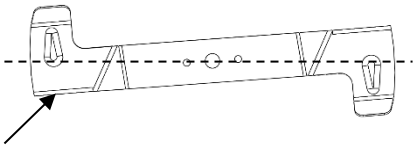

As this end is lower, more material needs removing

7.12 Tensioning the Blade brake clutch belt

Make the mower SAFE then proceed as follows:

🛠Tools required: 13mm A/F spanner
35mm A/F spanner (1-3/8”)
6mm Allen key

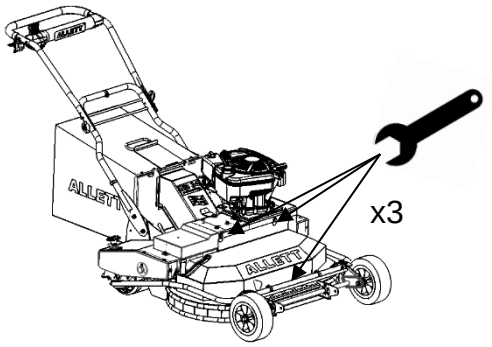

Using a spanner loosen the 3 deck guard fasteners and remove the guard

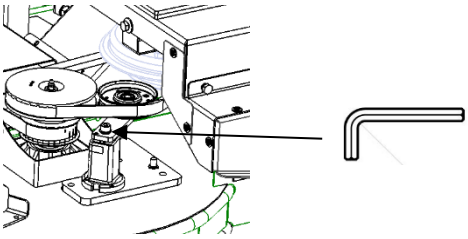

Using an Allen key loosen the cap head bolt on the adjuster

.

Using the 35mm spanner turn the adjuster Clockwise to tension the belt. Lock the adjustment securely with the cap head bolt. (30Nm torque)

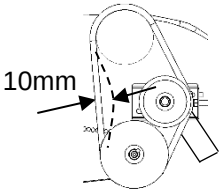

As a guide the deflection on a correctly tensioned belt should be approximately 10mm when a 5-6kg load is applied.

Replace belt guard

7.13 Tensioning the Spindle timing belt

Make the mower SAFE then proceed as follows:

🛠Tools required: 13mm A/F socket and ratchet
13mm spanner

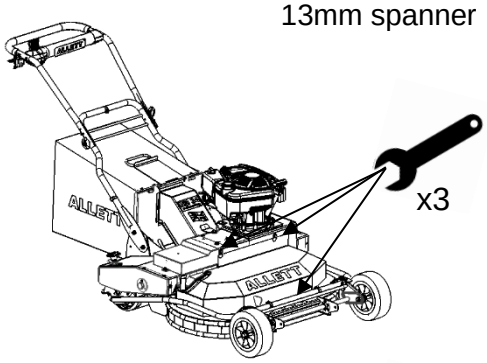

Using a spanner loosen the 3 deck guard fasteners and remove the guard

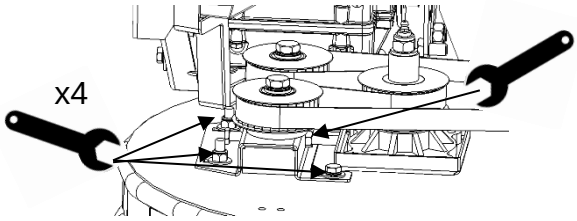

Using a socket and ratchet loosen the 4 fasteners securing the idler bracket to the deck and a spanner to loosen the adjuster screw lock nut

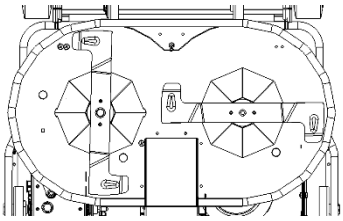

IMPORTANT - Before tensioning check the blade timing. This is important to avoid blade collisions. The blades should be timed as shown

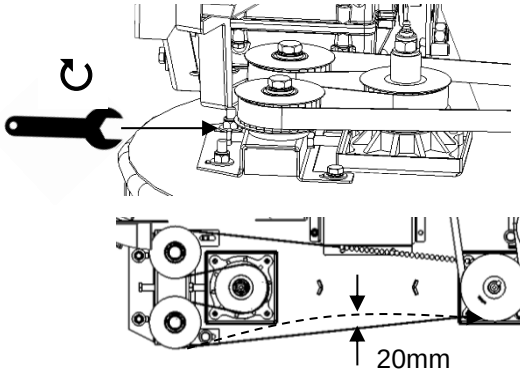

Using a spanner turn the adjuster screw clockwise ↻ to tension the belt. As a guide the deflection on a correctly tensioned belt should be approximately 20mm when a 5-6kg load is applied

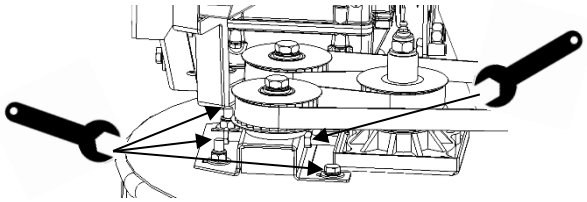

Tighten the 4 fasteners securing the idler bracket to the deck and tighten the adjuster screw lock nut. Replace the deck guard

Tip: Do not over tension the belts as this will cause misalignment of the idler and spindle pulleys and cause the belt to run off causing damage.

7.14 Timing the blades

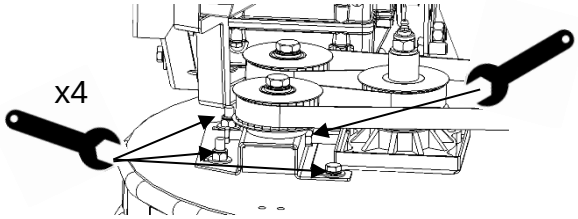

Using a socket and ratchet loosen the 4 fasteners securing the idler bracket to the deck and a spanner to loosen the adjuster screw lock nut

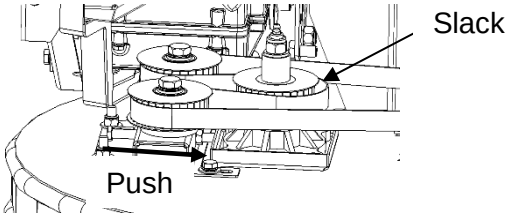

Push the idler bracket towards the spindle as far as it will go. You may need to loosen the adjuster screw further. This will provide sufficient slack to rotate one spindle.

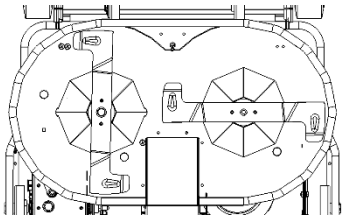

With the timing belt slack rotate one spindle only, so that the blades line up as shown

Carefully tension the timing belt as described in Section 7.10 to make sure the blades remain in position

7.15 Adjusting the final drive chain tension

The Uplift86 is fitted with a spring operated chain tensioner. This will ensure the chain tension will be constantly maintained. Every 2 weeks check the chain tension and make sure the adjuster is free to move. Grease as necessary.

Make the mower SAFE then proceed as follows:

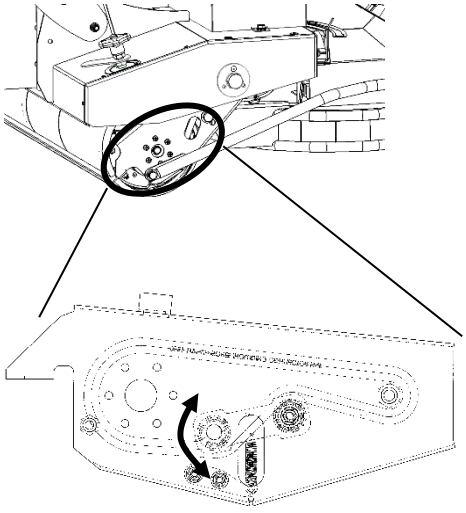

Set the mower to the highest height of cut

Check the tensioner arm is free to move and the chain is routed as shown

7.16 Adjusting the rear roller scraper

Make the mower SAFE then proceed as follows:

🛠Tools required: 10mm spanner x2

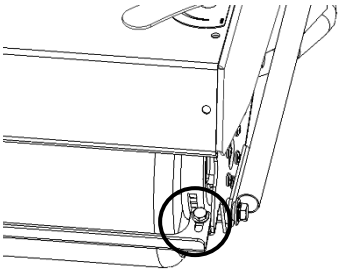

Using a pair of spanners loosen the rear roller scraper fasteners. Then move the scraper nearer or further from the roller.

Should the scraper not be required position it in the furthest position from the roller - do not remove it, it adds strength to the roller assembly

7.17 Engine stop adjustment

For the engine to stop the throttle arm must make contact with the stop switch. If adjustments are necessary make the mower SAFE then proceed as follows:

🛠Tools required: 8mm spanner

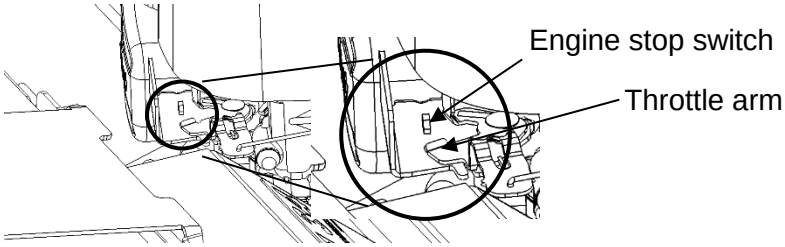

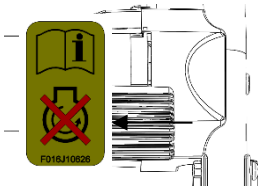

Set the throttle in the Stop position

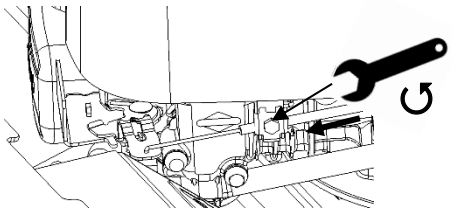

Using a spanner loosen the throttle cable clamp on the engine. Pull the throttle cable through the clamp until the throttle arm makes contact with the stop switch. Tighten the cable clamp.

7.18 Park brake adjustment

To set the park brake so that the

🛠Tools required: 13mm spanner

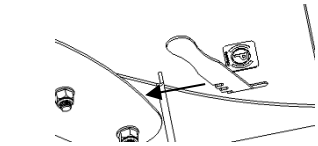

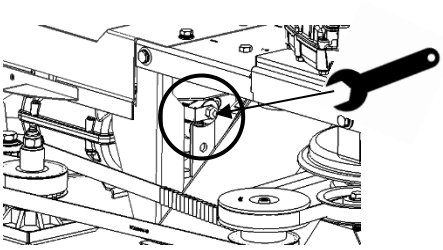

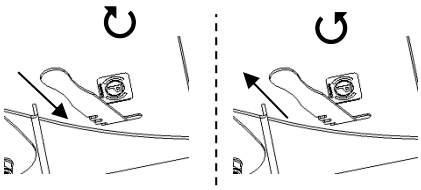

Set the Park brake lever in an appropriate slot

⇩

Locate the adjuster nut on the transmission

⇩

If the Park brake lever locates in a slot but is too loose - adjust the nut clockwise to move the Park brake lever down

If the Park brake is too tight so that the lever cannot be located into a slot - adjust the nut anticlockwise to move the Park brake lever up

7.19 Grass bag cleaning and replacement

Avoid washing the grass bag with high pressure water or steam cleaners. A blocked mesh will prevent a clean collection and is best cleaned with a stiff bristled brush. Replace a torn or damaged grass bag immediately.

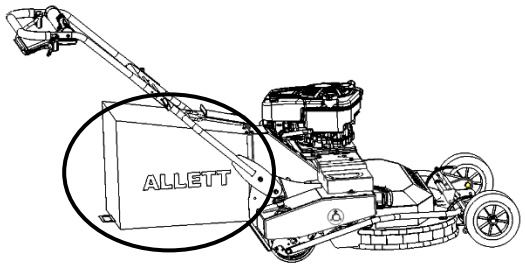

7.20 Inspection of safety critical components

The below parts are critical to the safe operation of your lawnmower, before each use check that:

- When the park brake is engaged the mower cannot move.
- The guards, deflectors and the grass box are in good condition and secured in place.
- The engine can be stopped by the throttle lever in case of an emergency.
- When the bail bars are released the blades and land roll drive stop immediately.

7.21 Maintenance schedule

Activity	Task	Daily	Weekly	Monthly	Yearly
Check					
	Engine oil level	●			
	Fuel level	●			
	Air cleaner condition	●			
	Guards in place	●			
	Cutting blades	●			
	Fasteners		●		
	Chain and belt tension			●	
	Spark plug			●	
	Tire pressures			●	
Clean					
	Debris/grass from mower	●			
	Engine cooling fins	●			
	Fuel sediment bowl				●
	Air filter elements		●		
	Inside guards		●		
Test					
	Parking brake	●			
	Engine stopping	●			
	Drive engagement/disengagement	●			
Replace					
	Engine oil				●
	Spark plug				●
	Air filter elements				●

8.0 Vibration reduction

Best practices for reducing vibration emission:

Inspect the rubber handle grip for signs of wear and deterioration, replace if necessary. Properly adjust the handle bars to improve operator comfort and further limit vibration transmission.

A well-maintained mower with a set of accurately ground and balanced blades is recommended to limit vibration emission. Forcing the mower to cut longer grass than intended or mowing on unsuitable surfaces will result in higher levels of vibration and wear.

9.0 Noise reduction

Best practices for reducing noise emission:

Forcing the mower to cut longer grass than intended or setting it to work at great depths may cause higher levels of noise emission. Fitting non-standard Allett blades may increase noise emission too.

Damaged exhausts or loose guards can increase noise emissions. Therefore, before use inspect the exhaust system for signs of wear and ensure the guards are securely attached and in good condition.

10.0 EU Declaration of conformity

We: **Allett Ltd**
of: Regal House, Airfield Industrial Estate, Hixon, Staffordshire, ST18 0PF, UK
declare that:

Equipment designation: Pedestrian petrol powered rotary lawn mower
Model name/number: UPLIFT86 (Cutting width 0.86m)

in accordance with the following directives:

2014/53/EU	Conforms with the essential protection requirements of the Electromagnetic Compatibility Directive and its amending Directives.
2006/42/EC	Conforms with the essential requirements of the Machinery Directive and its amending Directives.
2000/14/EC	Conforms with the essential requirements of the Noise Directive and its amending Directives. The conformity assessment procedure followed was in accordance with Annex VI of the Directive

Has been designed and manufactured to the following standards:
EN ISO 12100-1:2003+A1:2009
Safety of machinery. Basic concepts, general principles for design. Basic terminology, methodology.
EN ISO 12100-2:2003+A1:2009
Safety of machinery. Basic concepts, general principles for design. Technical principles.
BS EN ISO 5395-1/-2:2013
Garden equipment – Powered lawnmowers – Safety

Measured Sound Power Level (2000/14/EC, BS EN ISO 5395-1 Annex F): 98dB L_{WA}
Guaranteed Sound Power Level (2000/14/EC): 100dB L_{WA}
Uncertainty K: 1.6dB
Sound Pressure Level (BS EN ISO 5395-1 Annex F): 84dB L_{PA}
Wear hearing protection!
Vibration test code BS EN 836 Annex G, a_h 5.9m/s/s Uncertainty K: 1.5m/s/s

Notified body: AVT Reliability, Warrington Cheshire
Technical construction file is kept by: Allett Ltd, Regal House, Airfield Industrial Estate, Hixon, Staffordshire, ST18 0PF, UK

I hereby declare that the equipment named above has been tested and found to comply with the relevant sections of the above referenced specifications. The unit complies with all essential requirements of the Directives

Signed by:

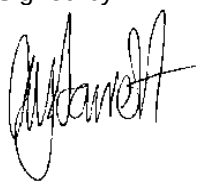

Name: Austin Jarrett
Position: Managing Director
Done at: Allett Ltd, Regal House
On: 1st March 2018

11.0 Fault finding when mowing

Problem	Possible cause	Remedy
Occasional blades of uncut or damaged grass	Forward speed too fast Height of cut too high Blunt blade Drive belt/clutch slipping Engine speed too low	Reduce forward travel speed. Reduce height of cut Grind/recondition blade Adjust belt tension/clutch cable Adjust engine speed to maximum
Strips of uncut grass between adjacent runs	Overlap between runs too small	Increase overlap between runs
Uneven cut	Uneven ground conditions Flat tire Incorrectly adjusted height of cut	Reduce forward travel speed, change direction of cut Inflate tire to 1.5 bar (20 psi) Make sure height of cut is set even on both sides
Scalping of grass	Height of cut too low for conditions Uneven ground conditions Uneven ground conditions	Increase height of cut Increase height of cut, change direction of cut Fit anti scalp roller option
Ribbing of grass perpendicular to direction of travel (Washboard)	Forward travel speed too fast. Engine speed too low	Reduce forward travel speed Adjust engine speed to maximum
Littering	Forward travel speed too fast Roller scraper too far from roller Blocked deck/chute Tight turns being made – roller litters Engine speed too low Grassbag full or fabric mesh blocked	Reduce forward travel speed Adjust roller scraper Remove blockage Avoid cutting adjacent stripes Adjust engine speed to maximum Empty bag or clean fabric mesh
Excessive blade wear.	Excessively abrasive ground conditions Blade regularly makes contact with the ground Worn blades	Increase height of cut Increase height of cut Grind/recondition the blade
Poor collection	Forward travel speed too fast Damaged blade Blocked deck/chute Belt/clutch slipping Low engine speed Grassbag full or fabric mesh blocked	Reduce forward travel speed Replace blade Remove blockage Adjust belt tension/clutch cable Adjust engine speed to maximum Empty bag or clean fabric mesh
Mower will not drive forward	Loose drive belt Loose chain drive Park brake engaged Gearbox in neutral	Adjust belt Adjust chain Release park brake Engage forward gear
Blades will not turn	Handle bar safety lever not being engaged Blocked deck/chute Belt/clutch slipping	Engage safety lever first Remove blockage Adjust belt tension/clutch cable
Engine will not start	Incorrect start up procedure Damaged or faulty wiring loom/switch	Disengage red blade lever & use full throttle Check wiring connections & switches
Engine tight to pull start	Engine stopped with clutch running	Stop clutch before stopping engine

12.0 Specification

Model name	UPLIFT86
Cutting width	864mm (34”)
Engine	Briggs and Stratton 950E
Engine fuel/oil capacity	1.1L Unleaded fuel, 0.6L oil SAE 10W-30
Power output (Net)	12.88Nm @3060rpm (Calculated to be 5.5hp @3060rpm)
Transmission	5 speed manual gearbox giving forward speeds of 1.2 – 4.2 mph (1.9 – 6.6km/h or 0.5 – 3.0m/s) @ 2900rpm engine speed no load
Handlebar	Adjustable 950-1080mm (@25mm cut height) with ergonomic foam grip
Land roll engagement	Handle mounted lever engaging V belt via cable
Blade engagement	2 operation handle mounted lever operating a blade brake clutch
Rear roller	190mm diameter (7.5”) full width and serviceable seam welded 3 piece steel roller with glass filled nylon spur gear differential. Complete with adjustable scraper bar
Front wheels	200mm diameter (8.0”) solid tires running on twin bronze bushes – Greasable Shafts
Weight	145kg
Dimensions (W x L x H)	940mm x 2000mm x 1200mm Max
Height of cut	15 – 75mm continuously variable through this range
Grass box	90L steel frame mesh bag with 2 carry handles
Machine options	Front mounted strip brush, cut and drop shoot

13.0 Guarantee

Allett guarantees this product against manufacturing defects. We will repair (or replace at our option) if a manufacturing defect occurs within the guarantee period as long as it has not been subjected to rental/hire use. The engine fitted to this mower is covered by the engine manufacturer. See engine manuals for details.

The guarantee period is 1 year for parts and labour costs from the date of purchase.

To obtain a repair under this guarantee:

- Take your lawnmower to an Allett approved service agent
- Show your dated proof of purchase
- Show the guarantee page

This guarantee does not apply if:

- The product has been resold by the original purchaser (this does not apply in the Republic of Ireland) or has been used under hire.
- The product has been modified to change the manufacturers specification, or if non-genuine spares have been fitted
- If any previous repair has been undertaken by anyone other than an Allett approved service agent
- The fault is due to maladjustment, abuse, neglect or accidental damage
- The fault is due to lack of lubrication or maintenance
- The failure is due to normal wear

The following parts are considered as wearing parts. Their life is dependent on regular servicing and they are not therefore normally considered by the guarantee:
Blades, drive chains, bearings, belts, rubber on the rear roller and cables.

The cost of routine maintenance of the product is not covered by the guarantee.

It is in your best interest to follow the operating instructions for your lawnmower as a properly cared for product should give many years of excellent service cutting grass.

Always insist on genuine Allett spares or parts. Any damage caused to the product through the fitting of parts not made or approved by Allett is not covered by the guarantee.

Your statutory rights are not affected by this guarantee.

When the time comes to dispose of this product please consider the environment and take it to a recognised recycling facility.

14.0 Parts section

UPLIFT86

UPLIFT86 – Parts Section

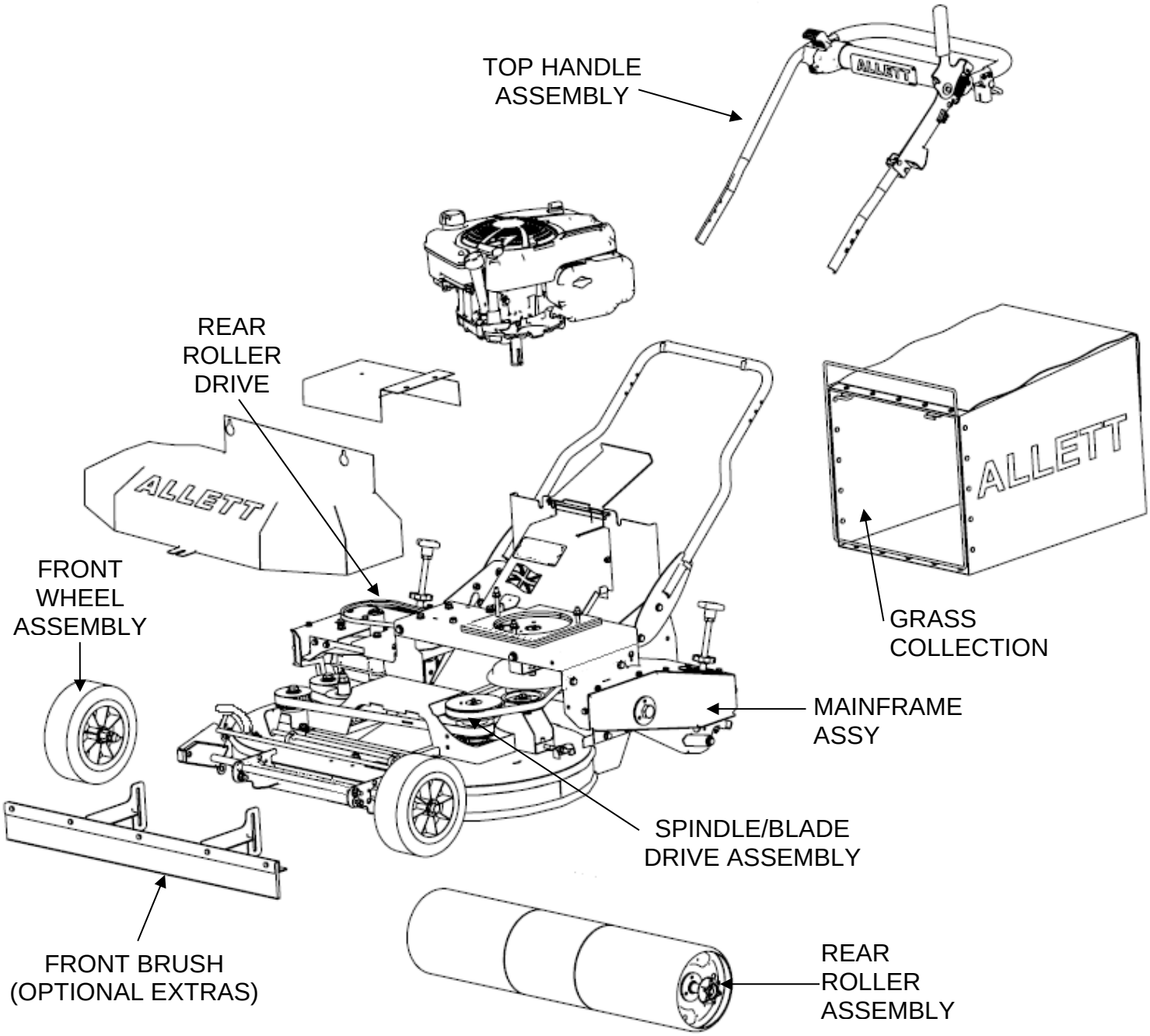

MODEL UPLIFT86: - Mainframe Assembly (Fig 1)

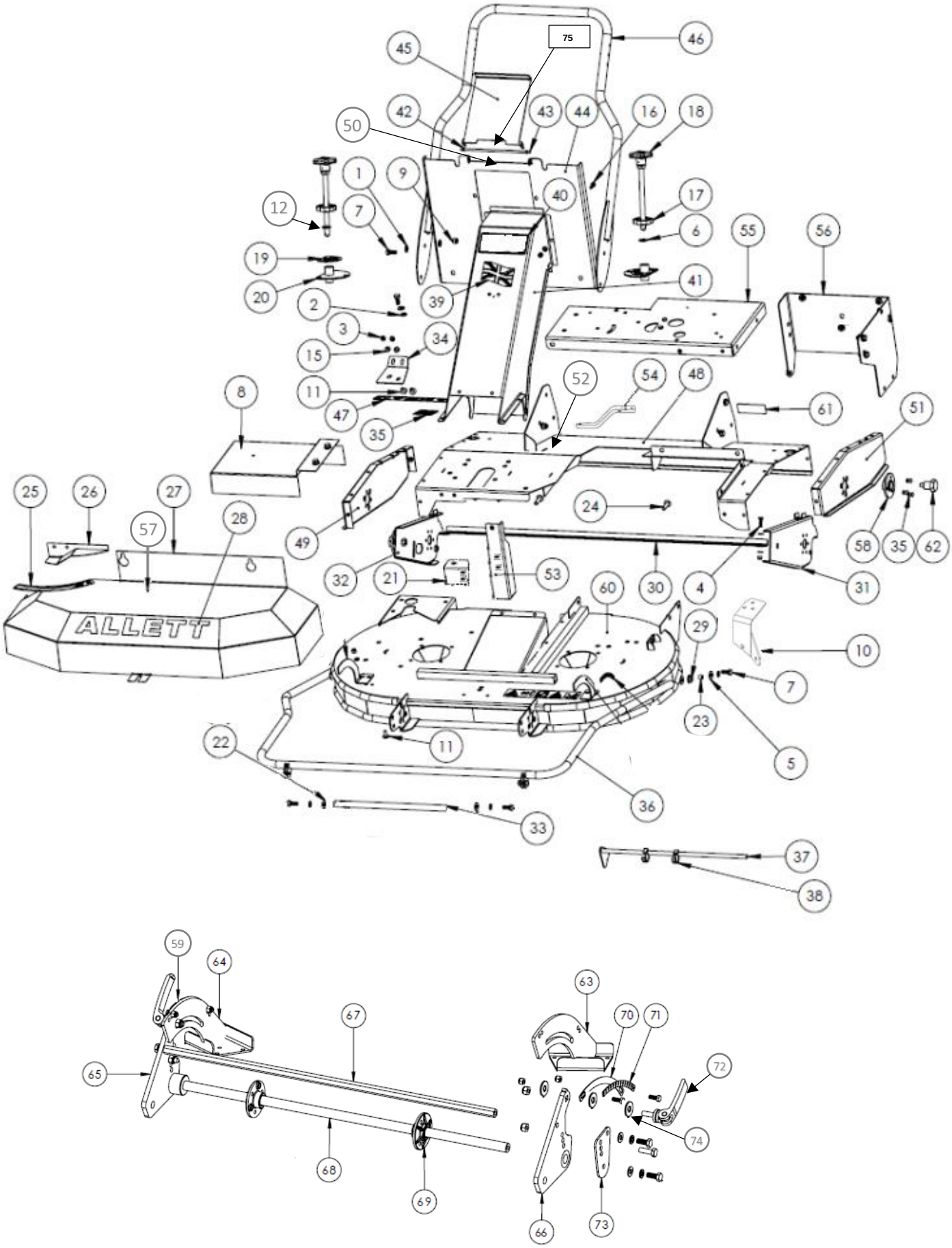

MODEL UPLIFT:- Mainframe Assembly (Fig 1)

ITEM NO.	DESCRIPTION	PART NUMBER	USED
1	M8 PLAIN WASHER	WM8	26
2	SPRING WASHER	SWM8	24
3	NUT M6 NYLOC	NNM6	16
4	M6X20 SET SCREW	SM620	3
5	M8 FLAT WAHSER FORM C	WM8C	7
6	SPRING WASHER M12	SWM12	2
7	SET SCREW M8 x 20	SM825	16
8	TRANSMISSION BELT COVER	F016J10549	1
9	NUT M8 NYLOC	NNM8	7
10	CABLE REACTION BRACKET	F016J11455	1
11	SCREW M6 x 16 ROOFING BOLT	S11060	5
12	WASHER M6 FORM A	WM6A	13
13	M8x25 CUP SQ BOLT	M8X25 CUP SQ	1
14	SPRING WASHER M6	SWM6	22
15	WASHER M6 FORM C	WM6C	26
16	SET SCREW M6 x 16	SM616	25
17	LOBED WASHER THROUGH M12	F016J10669	2
18	HOC HANDWHEEL ASSEMBLY	F016J10515	2
19	HOC ADJUSTMENT DECAL	F016J10627	2
20	HOC STIFFNER ASSEMBLY	F016J10665	2
21	ENGINE PILLAR BRACKET	F016J11469	1
22	WASHER M8 FORM G	WM8G	2
23	SPACER	F016A57748	2
24	M8x30 BUTTON HEAD SKT SET SCREW	M830BHSS	2
25	GEARBOX DECAL	F016J10628	1
26	BELT COVER GEAR LEVER	F016J10609	1
27	BELT COVER	F016J10529	1
28	DECAL ALLETT MEDIUM	AM81621	1
29	L.H. PIVOT BUSH	F016A57676	2
30	REAR ROLLER SCRAPER	F016J10439	1
31	REAR ROLLER ARM LH FAB	F016J10525	1
32	REAR ROLLER ARM Rh FAB	F016J10535	1
33	WHEEL PIOT BRACE BAR	F016J11012	1
34	BOLTED CHUTE BRACKET	F016J10997	1
35	DECAL 100dB	AM81434	1
36	HOC LINK FAB	F016J10580	1
37	SCRAPER/STAND BAR ASSEM	F016J10625	1
38	CABLE CLIP	F016T49524	5
39	UNION FLAG DECAL	AM81525	1

40	UPLIFT CHUTE DECAL	F016J11591	1
41	CHUTE ASSEMBLY	F016J11566	1
42	M5 NYLOC NUT	F016L59926	2
43	HINGE SHAFT	F016J10572	1
44	COLLECTION PLATE	F016J11568	1
45	CHUTE COVER	F016J11569	1
46	LOWER HANDLE WELDED ASSEM	F016J11571	1
47	ROTARY MOWER SAFETY DECAL	F016J10624	2
48	SKIRT FAB	F016J10520	1
49	SKIRT SIDE PRESSING RH	F016J10518	1
50	TORSION SPRING	F016J10477	1
51	SKIRT SIDE PRESSING LH	F016J10519	1
52	PARK DECAL	F016J10629	1
53	ENGINE PRESSED PILLAR	F016J11462	1
54	CLUTCH REACTION BRACKET	F016J11473	1
55	ENGINE TRAY	F016J10992	1
56	ENGINE TO DECK MOUNTING	F016J10991	1
57	UPLIFT MOWER DECAL	F016J11556	1
58	REAR ROLLER BEARING	F016L61256	2
59	HOC DECAL RH	F016J11523	1
60	DECK WELDED ASSY	F016J11567	1
61	UPLIFT SERIAL PLATE	F016J10634	1
62	ROLLER ARM PIVOT BOLT	F016J10568	2
63	HOC DECK BRACKET LH FAB	F016J11515	1
64	HOC DECK BRACKET RH FAB	F016J11520	1
65	WHEEL ARM RH FAB	F016J11530	1
66	WHEEL ARM LH FAB	F016J11525	1
67	FRONT WHEEL BRACE BAR	F016J11533	1
68	FRONT WHEEL PIVOT SHAFT	F016J11532	1
69	BEARING CARRIER S/A	F016A75331	2
70	DECAL PLATE	F016J11519	2
71	HOC DECAL LH	F016J11524	1
72	ECCENTRIC CLAMPING LEVER MALE	F016J11518	2
73	WHEEL BRACKET ADJUSTER	F016J11528	2
74	8MM WASHER FORM G	WM8G	6
75	DOUBLE TORSION SPRING - CHUTE	F016J10477	1

MODEL UPLIFT86:- Roller Drive Assembly (Fig 2)

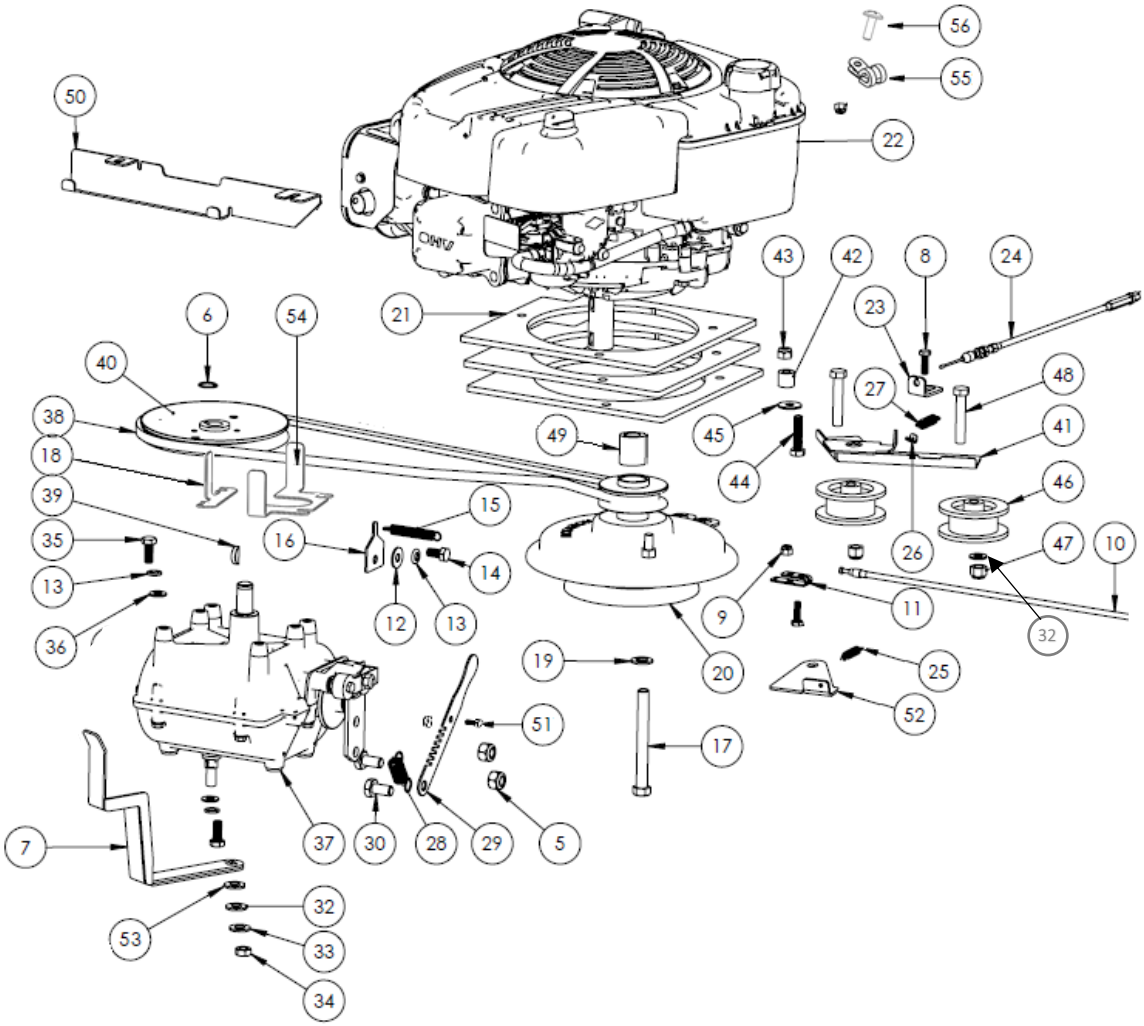

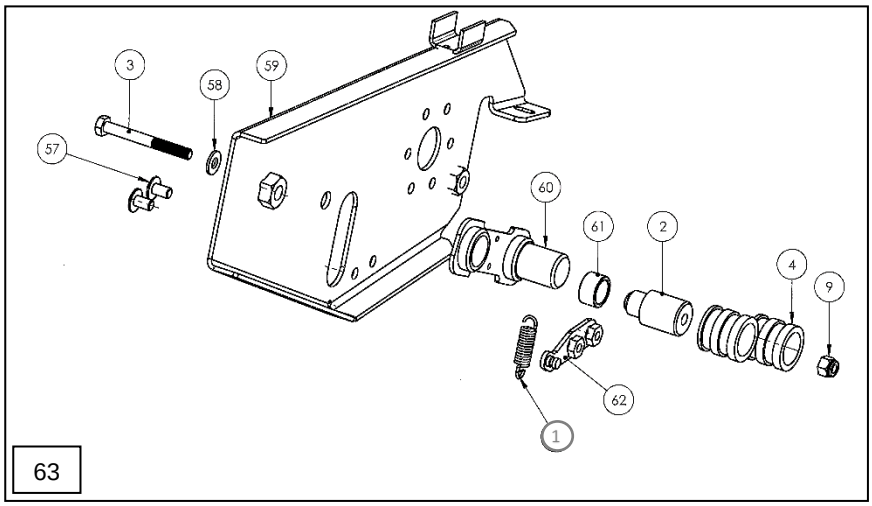

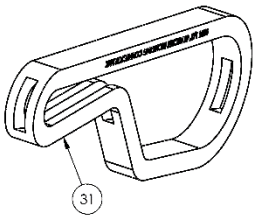

MODEL UPLIFT86:- Roller Drive Assembly (Fig 2)

ITEM NO.	PART NUMBER	DESCRIPTION	USED
1	F016L08487	TENSION SSPRING	1
2	F016J11489	TENSIONER SLEEVE BOSS	1
3	M6x50	BOLT M6 x 50	1
4	BSG1038	CHAIN TENSIONER SLEEVE SHORT	1
5	NNM10	M10 NYLOC NUT	2
6	AM81197	EXTERNAL CIRCLIP 19mm DIA	1
7	F016J10570	GEAR LEVER WELDED ASSEM	1
8	SM620	M6 x 20 SET SCREW	2
9	NNM6	NUT M6 NYLOC	3
10	F016J11456	HEAVY DUTY CLUTCH CABLE	1
11	F016J11458	CLUTCH CABLE CLEVIS	1
12	WM8C	M8 FLAT WAHSER FORM C	1
13	SWM8	SPRING WASHER	12
14	SM816	SET SCREW M8 x 16 ZC	1
15	F016J11472	CLUTCH RETURN SPRING	1
16	F016J11005	RETURN SPRING BRACKET	1
17	F016J10638	7/16 UNF X 4.5 BOLT	1
18	F016J11438	TRANSMISSION BELT BRACKET B	1
19	F016J11471	7/16" SERRATED WASHER	1
20	F016J10557	CB260 BLADE BRAKE CLUTCH	1
21	F016J10587	ENGINE MOUNTING PLATE	3
22	F016J10551	BRIGGS & STRATTON 950 VERTICAL	1
23	F016J10642	CABLE ANCHOR	1
24	F016J10577	ROTARY REAR ROLLER CABLE	1
25	F016J10979	DOUBLE IDLER RETURN SPRING	1
26	F016L66172	CONNECTOR	1
27	F016J10994	JOCKEY ARM TENSION SPRING	1
28	F016J10999	SPRING	1
29	F016J10616	HAND BRAKE LEVER	1
30	SM1020	SET SCREW M10x20	2
31	F016J11484	ROTARY MOWER DRIVE CHAIN 45 links	1
32	WM10	WASHER M10	2
33	SWM10	M10 SPRING WASHER	1
34	3/8 NUT	3/8 UNF NUT	1

35	SM820	SET SCREW M8 x 20 ZC	12
36	WM8	M8 PLAIN WASHER	12
37	F016J10541	700 SERIES MANUAL TRANSMISSION	1
38	F016J10544	TRANSMISSION BELT	1
39	AM81113	KEY 3/4 X 3/15 WOODRUFF	1
40	F016J10545	TRANSMISSION PULLEY WELDED ASSEM	1
41	F016J10980	DOUBLE IDLER FAB	1
42	F016J10984	DOUBLE IDLER PIVOT BOSS	1
43	NNM8	NUT M8 NYLOC	1
44	SM835	SET SCREW M8 x 35	1
45	WM8C	PLAIN WASHER M8 FORM C	1
46	F016J11011	FLANGED IDLER PULLEY	2
47	N11002	NUT 3/8" NYLOC	2
48	B11020	BOLT 3/8 x 2 1/4"	2
49	F016J11504	SLOTTED CLUTCH SPACER	1
50	F016J10993	BELT GUIDE	1
51	SM616	SET SCREW M6 x 16	1
52	F016J10998	SPRING BRACKET	1
53	WM12A	M12 WASHER FORM A	1
54	F016J11437	TRANSMISSION BELT BRACKET A	1
55	F016J11509	10mm P-CLIP	1
56	F016J11508	M6 x 20 ROOFING BOLT	1
57	F016J11022	M6 SOCKET DOME HEAD FLANGE SCREW	2
58	WM6C	WASHER M6 FORM C	1
59	F016J10535	REAR ROLLER ARM FAB RH	1
60	F016J11485	TENSIONER ARM FAB	1
61	F016J11483	BUSH	1
62	F016J11491	SPRING ANCHOR FAB	1
63	F016J11510	R/H ROLLER ARM & TENSIONER ASSY	
64	AB029	BELT GUIDE	1

MODEL UPLIFT86:- Spindle/Blade Drive Assembly (Fig 3)

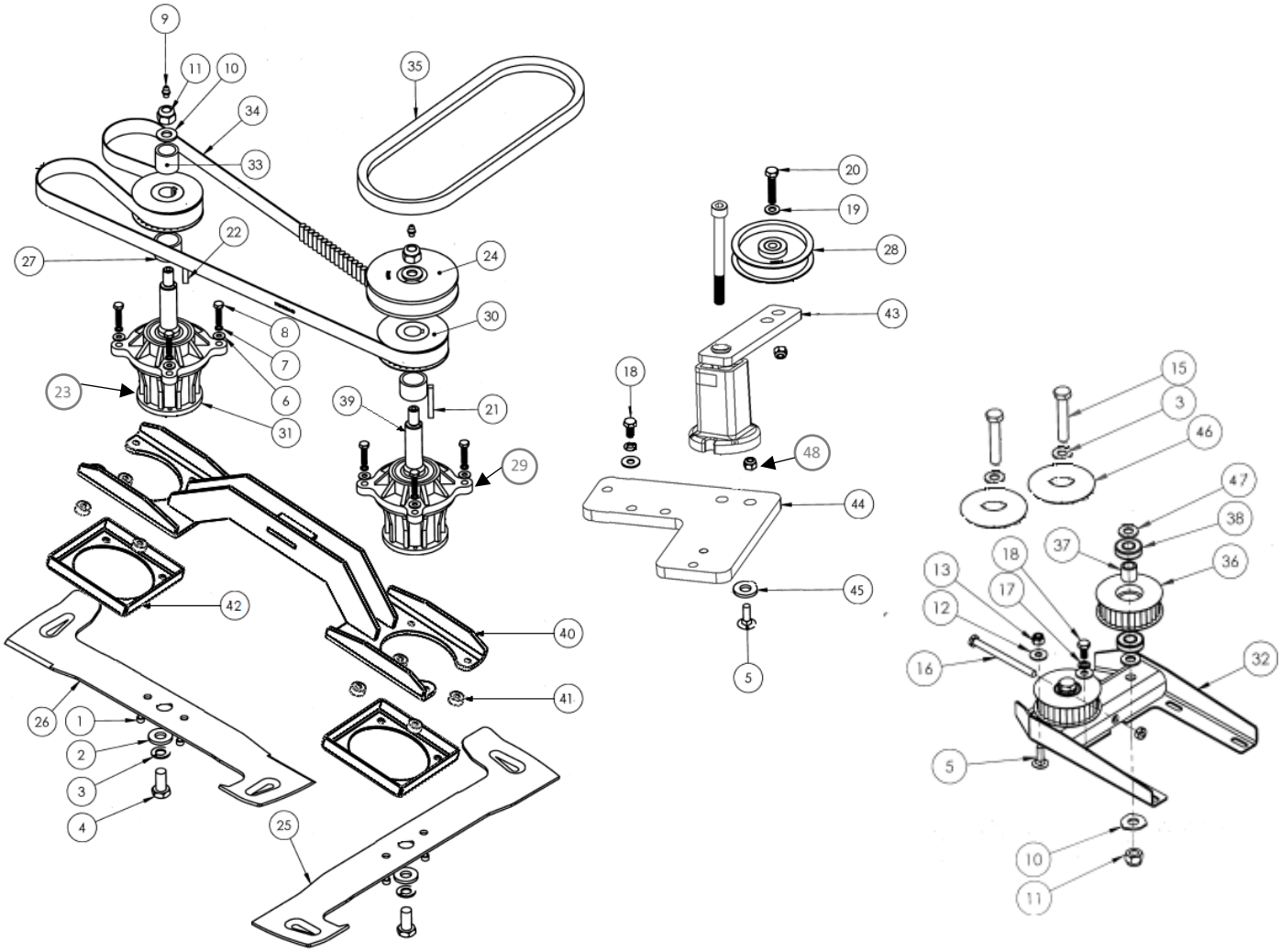

MODEL UPLIFT86:- Spindle/Blade Drive Assembly (Fig 3)

ITEM NO.	DESCRIPTION	PART NUMBER	USED
1	M5x6 SOCKET HD MACHINED	F016J10670	4
2 & 10	HARDENED WASHER M12	W2-M12	6
3	FLAT WASHER M12	WM12	4
4	SET SCREW M12 x 25	SM1225	2
5	M8X25 CUP SQ BOLT	CSM825	3

6	WASHER M6 FORM C	WM6C	8
7	SPRING WASHER M6	SWM6	8
8	SET SCREW M6 x 45	SM645	8
9	GREASE NIPPLE M6	GNM6	2
10 & 2	HARDENED WASHER M12	W2-M12	6
11	NUT M12 NYLOC	NNM12	2
12	M8 FLAT WAHSER FORM C	WM8C	6
13	NUT M8 NYLOC	NNM8	4
14	M8 NUT PLAIN	NM8	1
15	SET SCREW M12X75	SM1275	2
16	SET SCREW M8X100	SM8100	1
17	SPRING WASHER	SWM8	3
18	SET SCREW M8 x 25	SM825	3
19	M8 PLAIN WASHER	WM8	1
20	SET SCREW M8x40	SM840	1
21	KEY 6 X 6 X 44 FORM C	AM81283	1
22	6 x 6 x 25 KEY	AM81465	1
23	RM34 SPINDLE DRIVE SIDE ASSEMBLY	F016J11390	1
24	118 DIA SPB PULLEY	F016J10502	1
25	ROTARY MOWER BLADE LH	F016J10632	1
26	ROTARY MOWER BLADE RH	F016J10631	1
27	SPINDLE SPACER 20.5mm	F016J10508	2
28	ENGINE TO BLADE IDLER PULLEY	F016J11453	1
29	RM34 SPINDLE NON-DRIVE SIDE ASSEMBLY	F016J10790	1
30	30 TOOTH PULLEY C/W TAPERLOCK	F016J10491	2
31	SPINDLE HOUSING	F016J10498	2
32	TIMING BELT TENSIONER FAB	F016J10955	1
33	SPACER 25mm	F016J10494	1
34	DOUBLE TIMING BELT	F016J10496	1
35	ENGINE TO BLADE BELT	F016J11463	1
36	IDLER PULLEY	F016J10492	2
37	IDLER PULLEY SPACER	F016J10511	2
38	BALL BEARING	F016J11013	4
39	SPINDLE SHAFT	F016J10775	2
40	SPINDLE STIFFENER FAB	F016J10950	1
41	STIFFENER SPACER	F016J11386	8
42	SPINDLE MOUNT PRESSING	F016J10507	2
43	THROUGH MOUNT TENSIONER	F016J11451	1
44	BASE FOR TENSIONER	F016J11452	1
45	WASHER M12	WM12A	1
46	BEARING SHIELD	F016J11512	2
47	WSH 29/32 x .510 x 015	F016L10198	2
48	HALF NYLOC	NNH	1

MODEL UPLIFT86:- Rear Roller Assembly (Fig 4)

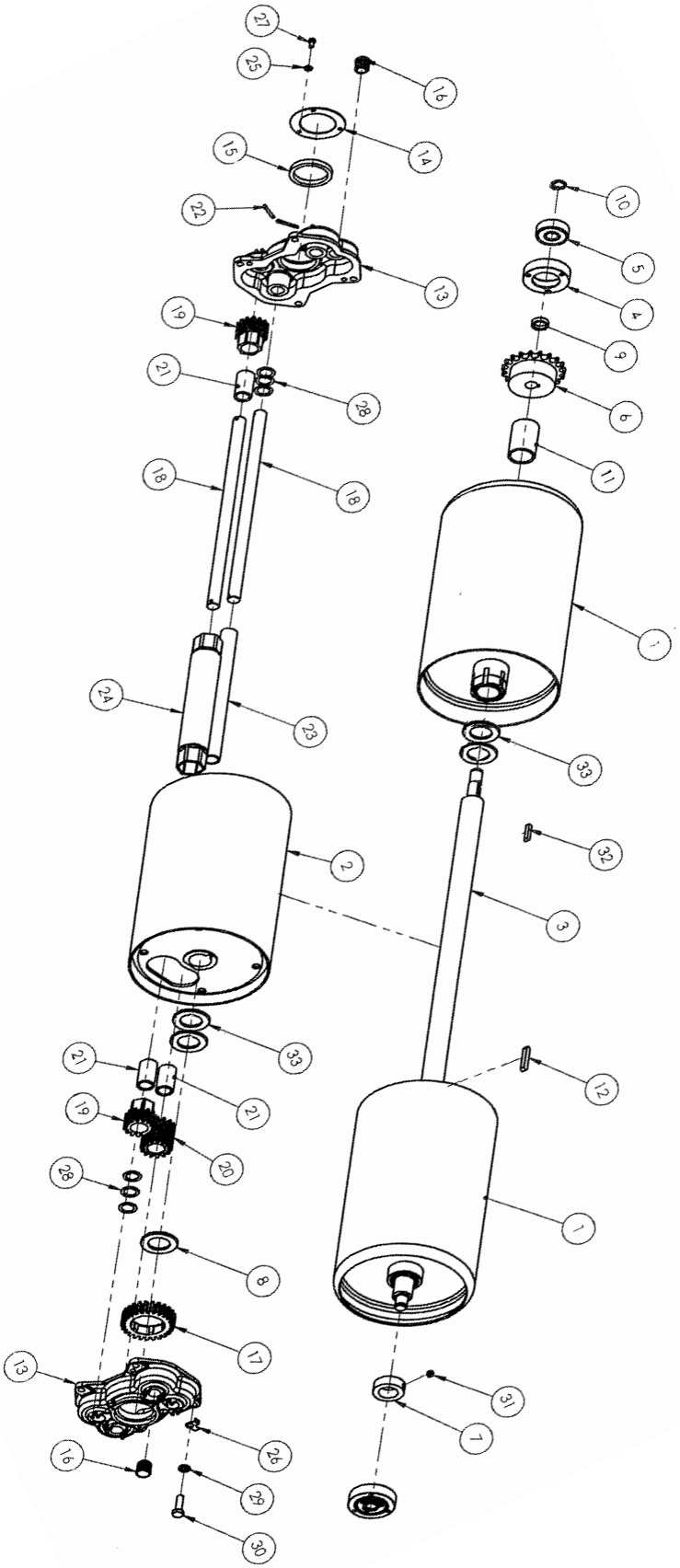

MODEL UPLIFT86:- Rear Roller Assembly (Fig 4)

ITEM NO.	DESCRIPTION	PART NUMBER	USED
1	HD OUTER ROLLER WELD ASSY	F016J11440	2
2	CENTRE DRUM ASSEMBLY	F016J11445	1
3	HD R/ROLLER SHAFT	F016J11411	1
4	HD R/ROLLER BEARING HOUSING	F016J11417	2
5	15mm BEARING	F016J11418	2
6	19T Sprocket	F016J10453	1
7	REAR ROLLER LOCKING COLLAR	BSG016	1
8	THRUST WASHER	F016L12501	2
9	HD ROLLER SPACER	F016J11420	1
10	15mm HEAVY DUTY EXT CIRCLIP	F016J11419	2
11	BUSH	F016L12497	4
12	KEY	F016L12503	1
13	DIFFERENTIAL GEAR COVER	F016Z20532	2
14	COVER PLATE	F016L12499	2
15	FELT WASHER	F016L12500	2
16	BLANKING PLUG	F016T48526	2
17	DIFF GEAR WHEEL	F016L12502	2
18	DIFFERENTIAL SHAFT	F016L12550	2
19	DIFFERENTIAL PINION	F016L12551	2
20	DIFFERENTIAL PINION (DOUBLE)	F016L13870	1
21	BUSH	F016L12422	3
22	SPLIT PIN	F016L12399	4
23	DISTANCE TUBE	F016L12552	1
24	PINION COUPLING TUBE	F016L66171	1
25	LOCKING WASHER	F016L10274	1
26	TAB WASHER	F016L12474	8
27	SCREW 10-24 UNC x 3/8 CHS HD	F016L20489	6
28	WASHER 0.906x0.632	F016L13236	6
29	SPRING WASHER M8	SWM8	8
30	SET SCREW M8 x 25	SM825	8
31	GRUB SCREW M8 x 8	ACGM8	1
32	PARALLEL KEY 5X5X25 FORM C	AM81125	1
33	HD R/ROLLER SHIM	F016J11459	4

MODEL UPLIFT86:- Top Handle Assembly (Fig 5)

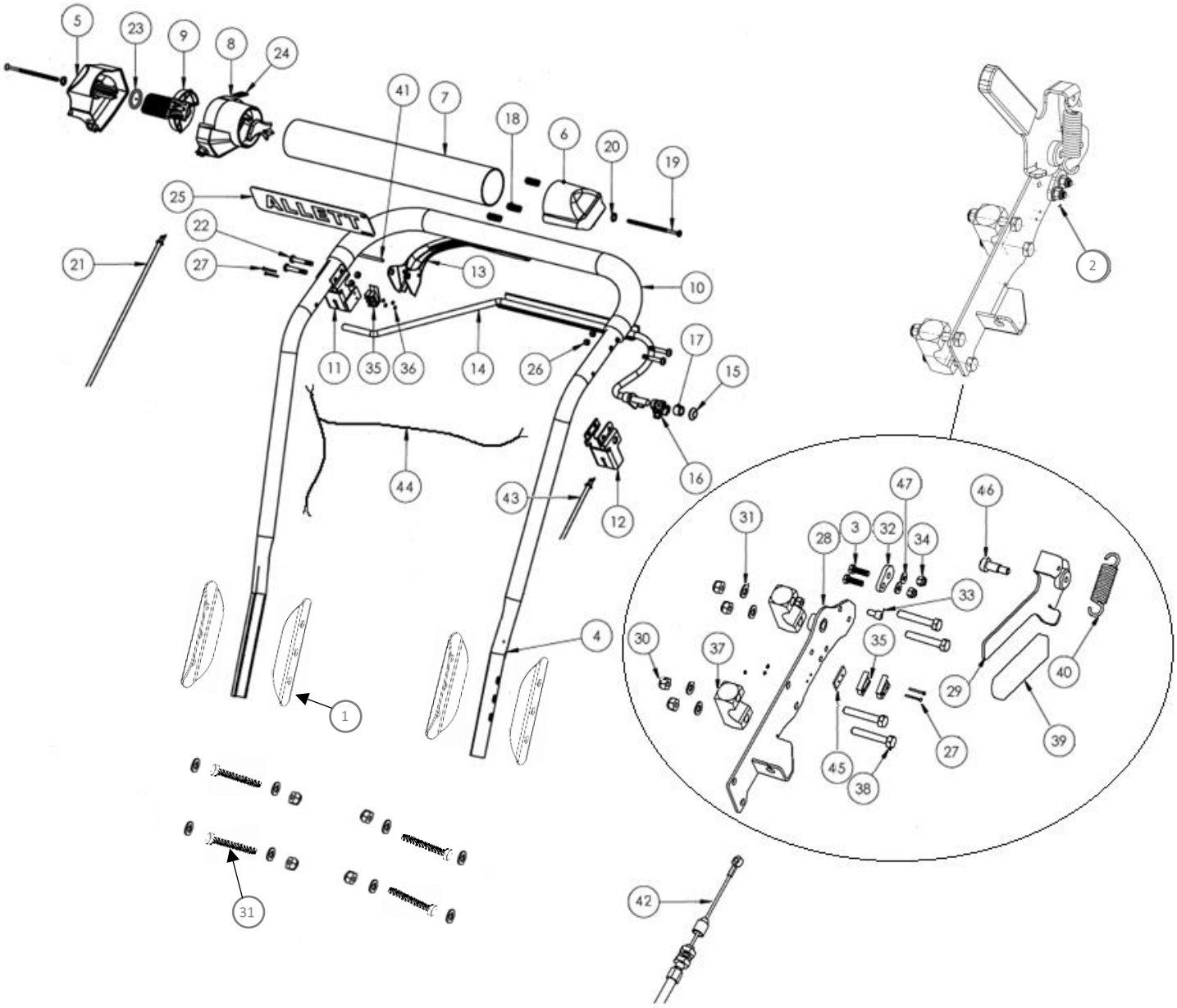

MODEL UPLIFT86:- Top Handle Assembly (Fig 5)

ITEM NO.	DESCRIPTION	PART NUMBER	USED
1	HANDLE REINFORCEMENT	C1803	4
2	CLUTCH LEVER SUB-ASSEMBLY	F016J11110	1
3	SET SCREW M6 x 20	SM620	2
4	TOP HANDLE LOOP	F016J11572	1
5	THROTTLE HANDLE PLATE	F016A75800	1
6	ADAPTOR TO HANDLE	F016A75817	1

7	CROSS TUBE	F016J11577	1
8	ADAPTOR - TUBE TO THROTTLE	F016A75816	1
9	THROTTLE COVER	F016L66176	1
10	FOAM GRIP	F016A75077	1
11	ROTARY OPC FAB	F016J10660	1
12	CLUTCH LEVER SADDLE L/H	F016J11397	1
13	CYL OPERATING LEVER S/A	F016J11398	1
14	CONTROL LEVER WELD ASSY	F016J11399	1
15	SECURING CAP	F016T48990	2
16	CABLE GRAB	F016L36717	1
17	SPACER	F016L36719	1
18	COMPRESSION SPRING	F016T49226	3
19	WOOD SCREW No8 X 3.5"	F016A75860	2
20	CUP WASHER R TYPE	F016A75864	2
21	THROTTLE CONTROL	F016J10558	1
22	SCREW M5 x 32 POZI PAN	f016A75751	4
23	O-Ring (20mm Id X 3mm Sect.)	F016A75826	1
24	READ MANUAL & ENGINE STOP DECAL	F016J10626	1
25	ALLETT SMALL 201x30 DECAL CURVED	AM81639	1
26	M5 NYLOC NUT	F016L59926	4
27	M2 SCREW	F016J10667	4
28	BLADE CLUTCH BACK PLATE FAB	F016J11465	1
29	BLADE CLUTCH LEVER FAB	F016J11460	1
30	NYLOC NUT M8	NNM8	4
31			
32	HD BLADE CLUTCH STOP	F016J11467	1
33	M6 x 12 CAP HEAD	SCM612	2
34	NUT M6 NYLOC	NNM6	2
35	ORDER ITEM 44	F016J10655	-
36	M2 NUT	F016J10668	8
37	HANDLE LEG CLAMP TAPPED	BSG1020	2
38	BOLT M8 x 50	BM850	4
39	FLAT CAP	AM81140	1
40	CLUTCH SPRING	F016J11581	1
41	SPIROL PIN 4x45mm	F016J10659	1
42	HEAVY DUTY CLUTCH CABLE	F016J11456	1
43	ROLLER CABLE	F016J10577	1
44	WIRING LOOM	F016J10655	1
45	MICRO SWITCH PLATE	F016J10661	1
46	M8 (10mm) X16 SOCKET SHOULDER SCREW	AM81632	1
47	WASHER M6 FORM A	WM6A	10

MODEL UPLIFT86:- Front Wheel Assembly (Fig 6)

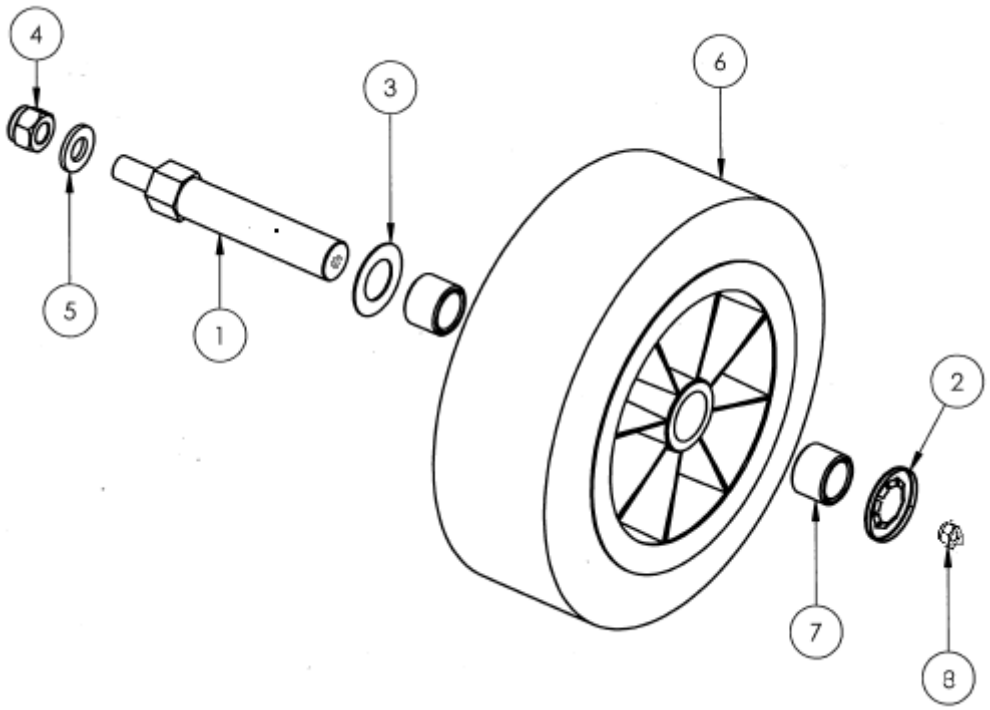

MODEL UPLIFT86:- Front Wheel Assembly (Fig 6)

ITEM NO.	DESCRIPTION	PART NUMBER	USED
1	FRONT WHEEL SHAFT	F016J10608	1
2	3/4" STARLOCK WASHER	F016J10287	1
3	WASHER 20mm	F016A58577	1
4	NUT M12 NYLOC	NNM12	1
5	M12 WASHER FORM A	M12 WASHER	1
6	SOLID 200mm TYRED WHEEL	F016J11574	1
7	OILITE BRONZE BUSH 1" X 3/4 X 3/4"	F016J10611	2
8	GREASE NIPPLE M6	GNM6	2
6 & 7 FITTED	BUSHED WHEEL ASSEM	F016J11575	1
COMPLETE ASSEMBLY	WHEEL & SHAFT ASSEMBLY	F016J11576	1

MODEL UPLIFT86:- Grass Collector Assembly (Fig 7)

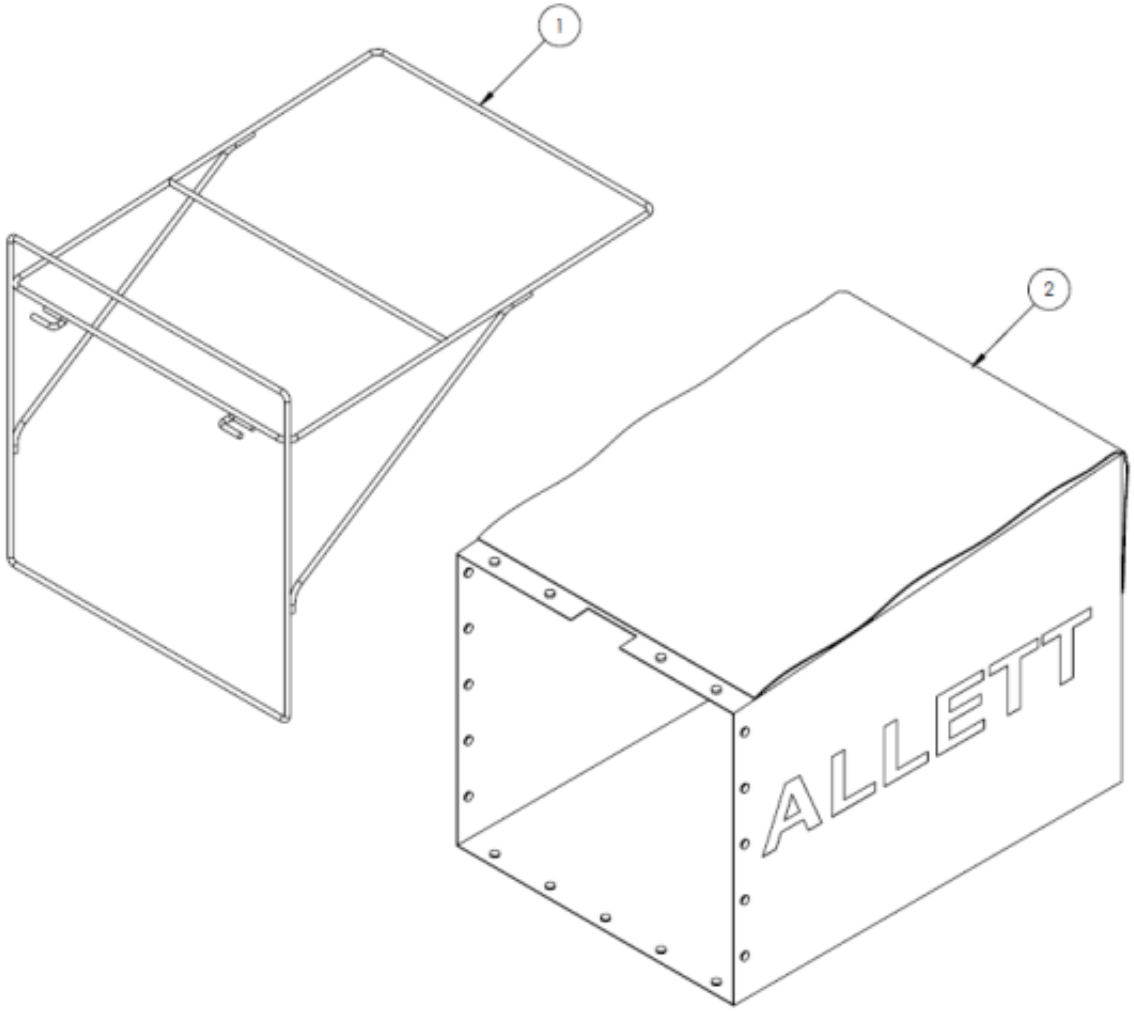

MODEL UPLIFT86:- Grass Collector Assembly (Fig 7)

ITEM NO.	DESCRIPTION	PART NUMBER	USED
1	GRASS COLLECTION FRAME	F016J10472	1
2	GRASS COLLECTION BAG	F016J10471	1

S

MODEL UPLIFT86:- Brush Assembly (Optional) (Fig 8)

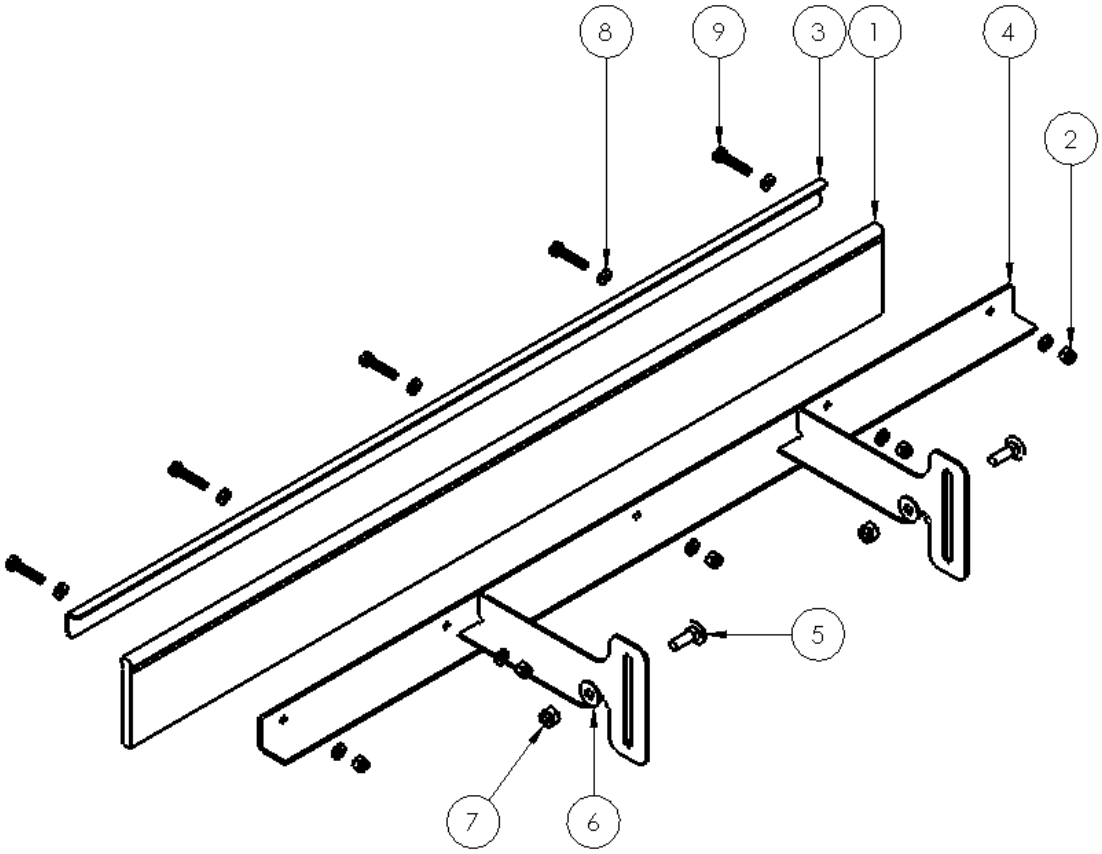

Brush Assembly Options

DESCRIPTION	PART NUMBER
SOFT BRUSH + CARRIER	F016J11580
MEDIUM STIFFNESS BRUSH + CARRIER	F016J11585
HARD STIFFNESS BRUSH + CARRIER	F016J11590

MODEL UPLIFT86:- Brush Assembly (Fig 8)

ITEM NO.	DESCRIPTION	PART NUMBER	USED
1	SOFT STIFFNESS BRUSH MEDIUM STIFFNESS BRUSH HARD STIFFNESS BRUSH	F016J10436 F016J10458 F016J10445	1
2	NUT M6 NYLOC	NNM6	5
3	BRUSH RETAINER STRIP	F016J10449	1
4	FRONT BRUSH BRACKET FAB	F016J10635	1
5	M8 x 25 CUP SQ BOLT	CSM825	2
6	M8 FLAT WAHSER FORM C	WM8C	2
7	NUT M8 NYLOC	NNM8	2

8	M6 FLAT WASHER	WM6A	10
9	SET SCREW M6 x 30	SM630	5

15.0 Wiring schematic

OPC = Operator presence control

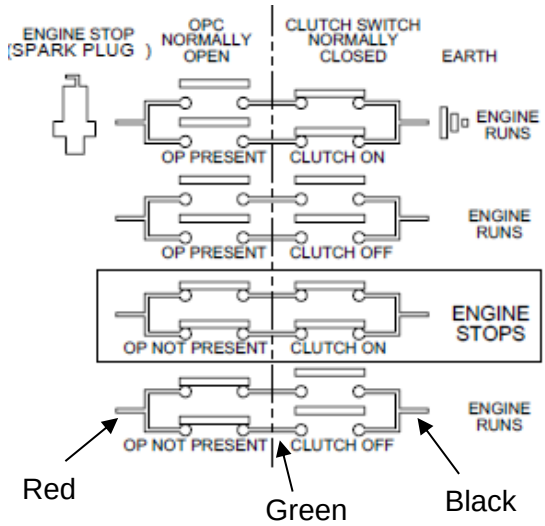

Notes